ENGLISH

CLAY PAKY
AN OSRAM BUSINESS

GLOW UP STRIP 100

& FLIGHT CASE

C71080

F21250

INSTRUCTIONS MANUAL

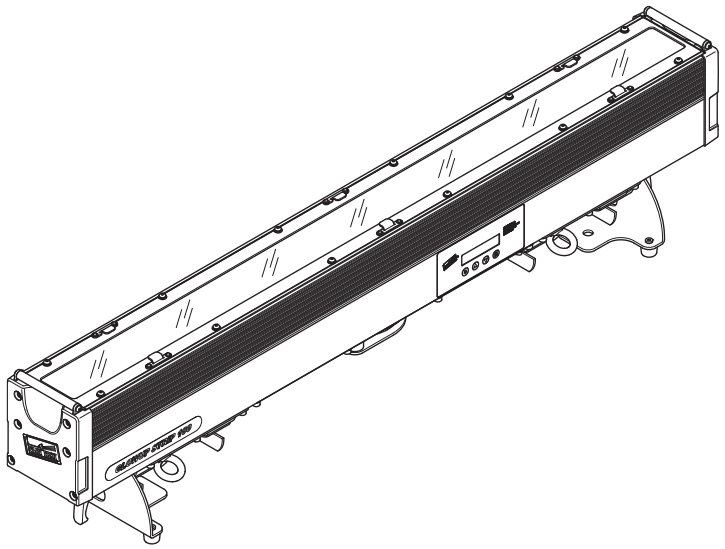

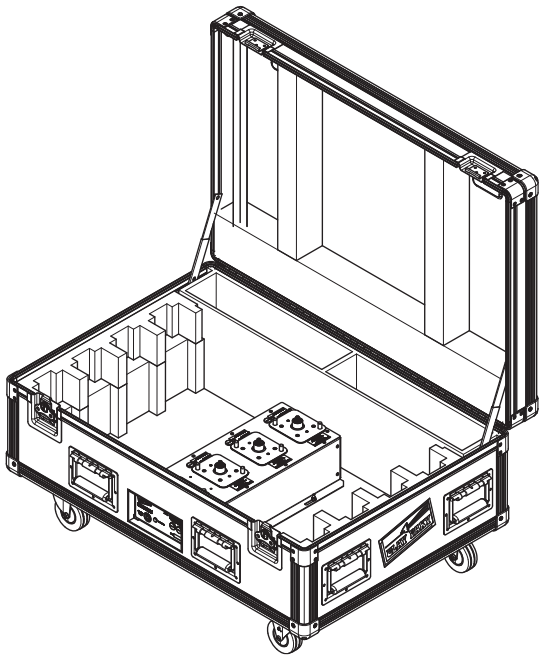

CONTENTS	
Pag.	**Contents**
2	Safety Information EN
4	Informazioni di sicurezza IT
6	Consignes de sécurité FR
8	Informationen zur Sicherheit DE
10	Informaciones de suguridad ES
12	Unpacking and preparation
12	Removal of the protective film
12	Installation and start-up
14	Control panel
16	Shortcut keys menu
16	Button function
17	Preset colors for Stand Alone
18	Menu set
25	Operating Mode
26	RDM Controls implemented for GLOWUP series
26	Aerial
27	Maintenance
29	Optional accessories
30	Technical data
30	Cause and solution of problems
31	Channel functions

Congratulations on choosing a Clay Paky product!
We thank you for your choice. Please note that this product, as all the others in the rich Clay Paky range, has been designed and manufactured with total quality to ensure excellent performance and best meet your expectations and requirements.

Carefully read this instruction manual in its entirety and keep it safe for future reference.

It is essential to know the information and comply with the instructions given in this manual in order to ensure the fitting is installed, used and serviced correctly and safely.

CLAY PAKY S.p.A. disclaims all liability for damage to the fitting or to the other property or persons deriving from installation, use and maintenance that have not been carried out in conformity with this instructions manual, which must always accompany the fitting.

CLAY PAKY S.p.A. reserves the right to modify the characteristics stated in this instructions manual at any time and without prior notice.

EN SAFETY INFORMATION

• Installation

Make sure all parts for fixing the projector are in a good state of repair. Make sure the point of anchorage is stable before positioning the projector.

The safety chain must be properly hooked onto the fitting and secured to the framework, so that, if the primary support system fails, the fitting falls as little as possible. If the safety chain gets used, it needs to be replaced with a genuine spare.

Ensure that the Flight Case, when used for charging Glow UP, is positioned at a distance of 15 cm from any surface or wall, to allow proper ventilation.

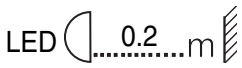

• Minimum distance of illuminated objects

The projector needs to be positioned so that the objects hit by the beam of light are at least 0.2 metres (8”) from the lens of the projector.

• Minimum distance from flammable materials

The projector must be positioned so that any flammable materials are at least 0.20 metres (8") from every point on the surface of the fitting.

t_a 40°C

• Maximum ambient temperature

Do not use the project if ambient temperature (Ta) exceeds 40°C.

GLOW UP STRIP 100	IP65

• IP65 protection rating

The equipment is fully protected against dust (first digit 6) and against jets of water (second digit 5).

FLIGHT CASE	IP20

• IP20 protection rating

The fitting is protected against penetration by solid bodies of over 12mm (0.47”) in diameter (first digit 2), but not against dripping water, rain, splashes or jets of water (second digit 0).

• Protection against electrical shock

Connection must be made to a power supply system fitted with efficient earthing (Class I appliance according to standard EN 60598-1).

It is, moreover, recommended to protect the supply lines of the projectors from indirect contact and/or shorting to earth by using appropriately sized residual current devices.

• Connection to the power mains

A qualified electrician must perform connection to the power mains.

Check that the mains frequency and voltage correspond to the frequency and voltage for which the projector was designed and indicated on the electrical data label.

This label also gives the input power. Refer to the latter to evaluate the maximum number of devices to be connected to the mains to avoid overloads.

t_c 90°C

• External surface temperature

The maximum temperature that can be reached on the external surface of the fitting, in a thermally steady state, is 90°C (320°F).

• Maintenance

Before starting any maintenance work or cleaning the projector, cut off power from the supply mains. After switching off, do not remove any parts of the fitting for at least 10 minutes. The lenses must be mounted and, if visibly damaged, they have to be replaced with genuine spares.

• Photobiological Safety

Risk Group 2
According to
EN 62471

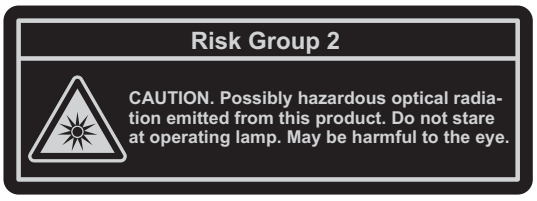

This product is intended for the following areas of application:

studios, stages, theaters, exhibitions, trade fairs, events, theme parks, entertainment venues, architectural lighting and similar

Not suitable for household illumination

Not for residential use

LiFePO4

• Battery

This product contains a lithium iron tetraphosphate rechargeable battery. To protect the environment, please discard the battery at the end of its life cycle according to current law.

Disposing

This product is supplied in compliance with European Directive 2012/19/EU - Waste Electrical and Electronic Equipment (WEEE). To preserve the environment please dispose/recycle this product at the end of its life according to the local regulation.

The products to which this manual refers comply with the European Directives pursuant to:
- 2006/95/EC - Safety of electrical equipment supplied at low voltage (LVD)
- 199/5/EC – Requirements for radio equipment (R&TTE)
- 2011/65/EU - Restriction of the use of certain hazardous substances (RoHS)
- 2009/125/EC - EcoDesign requirements for Energy-related Products (ErP)

IT INFORMAZIONI DI SICUREZZA

• Installazione
Assicurarsi che tutte le parti per il fissaggio del proiettore siano in buona condizione.
Assicurarsi della stabilità del punto di ancoraggio prima di posizionare il proiettore.
La fune di sicurezza, debitamente agganciata all'apparecchio e fissata alla struttura di sostegno, deve essere installata in modo che, in caso di cedimento del sistema di supporto primario, si abbia la minor caduta possibile dell'apparecchio. Dopo un eventuale intervento la fune di sicurezza deve essere sostituita con il ricambio originale.
Assicurarsi che il FLIGHT CASE quando utilizzato per la ricarica dei GLOW UP sia posizionato ad una distanza minima di 15 cm da qualsiasi superficie per consentire una corretta ventilazione.

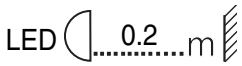

• Distanza minima degli oggetti illuminati
Il proiettore deve essere posizionato in modo tale che gli oggetti colpiti dal fascio luminoso siano distanti almeno 0,2 metri dall'obiettivo del proiettore stesso.

• Distanza minima dei materiali infiammabili
Il proiettore deve essere posizionato in modo tale che i materiali infiammabili siano distanti almeno 0,20 metri da ogni punto della superficie dell'apparecchio.

t_a 40°C

• Massima temperatura ambiente
Non utilizzare il proiettiore se la temperatura ambiente (Ta) supera i 40°C.

GLOW UP STRIP 100 IP65

• Grado di protezione IP65
L'apparecchio è totalmente protetto contro la polvere (prima cifra 6) ed è protetto contro i getti d'acqua (seconda cifra 5).

FLIGHT CASE IP20

• Grado di protezione IP20
L'apparecchio è protetto contro la penetrazione di corpi solidi di dimensione superiore a 12mm (prima cifra 2), mentre teme lo stillicidio, la pioggia, gli spruzzi e i getti d'acqua (seconda cifra 0).

• Protezione contro la scossa elettrica
È obbligatorio effettuare il collegamento ad un impianto di alimentazione dotato di un'efficiente messa a terra (apparecchio di **Classe I** secondo la norma EN 60598-1).
Si raccomanda, inoltre, di proteggere le linee di alimentazione dei proiettori dai contatti indiretti e/o cortocircuiti verso massa tramite l'uso di interruttori differenziali opportunamente dimensionati.

• Collegamento alla rete di alimentazione
Le operazioni di collegamento alla rete di distribuzione dell'energia elettrica devono essere effettuate da un installatore elettrico qualificato. Verificare che frequenza e tensione della rete corrispondano alla frequenza ed alla tensione per cui il proiettore è predisposto ed indicate sulla targhetta dei dati elettrici. Sulla medesima targhetta è pure indicata la potenza assorbita. Fare riferimento a quest'ultima per valutare il numero massimo di apparecchi da collegare alla linea elettrica, al fine di evitare sovraccarichi.

t_c 90°C

• Temperatura della superficie esterna
La temperatura massima raggiungibile sulla superficie esterna dell'apparecchio, in condizioni di regime termico, è di 90°C.

• Manutenzione
Prima di iniziare qualsiasi operazione di manutenzione o pulizia sul proiettore togliere la tensione dalla rete di alimentazione. Le lenti devono essere obbligatoriamente montate; devono inoltre, se visibilmente danneggiate, essere sostituite con ricambi originali.

Risk Group 2
According to
EN 62471

• Sicurezza fotobiologica
ATTENZIONE: Possibile radiazione ottica rischiosa emessa da questo prodotto.
Non fissare la lampada in funzione. Può essere pericoloso per gli occhi.

Il prodotto è concepito per essere utilizzato nei seguenti ambiti:
studi, palchi, teatri, esposizioni, fiere, eventi, parchi a tema, locali di intrattenimento, illuminazione architetturale e simili.

Non adatto all'illuminazione domestica

Non per uso residenziale

• Batteria

Questo prodotto contiene una batteria ricaricabile Litio Ferro Tetrafosfato. A tutela dell'ambiente si prega di smaltire la batteria a fine vita in conformità alla normativa vigente.

Smaltimento

Questo dispositivo è conforme alla Direttiva Europea 2012/19/UE - Rifiuti di apparecchiature elettriche ed elettroniche (RAEE). Nel rispetto dell'ambiente, smaltire/riciclare il prodotto al termine del suo ciclo di vita secondo le disposizioni di legge locali.

I prodotti a cui questo manuale si riferisce sono conformi alle Direttive Europee di cui sono oggetto:
- 2006/95/CE - Sicurezza delle apparecchiature alimentate in Bassa Tensione (LVD)
- 199/5/EC – Requisiti per apparecchiature radio (R&TTE)
- 2011/65/UE - Restrizione d'uso di determinate sostanze pericolose (RoHS)
- 2009/125/CE - Specifiche per la progettazione ecocompatibile dei prodotti connessi all'energia (ErP)

FR CONSIGNES DE SÉCURITÉ

• Installation
S'assurer que toutes les pièces pour la fixation du projecteur sont en bon état.
S'assurer de la stabilité du point d'ancrage avant de positionner le projecteur.
Le câble de sécurité, à fixer correctement à l'appareil et à la structure de support, doit être installé de façon à ce que, en cas de rupture du système de support principal, la chute de l'appareil soit la plus limitée possible.
Après une éventuelle intervention du câble de sécurité suite à une chute, il faut le remplacer par une pièce de rechange d'origine.
Lorsqu'il est utilisé pour la recharge des GLOW UP, vérifier que le FLIGHT CASE est positionné à une distance minimum de 15 cm par rapport à n'importe quelle distance afin de permettre une bonne ventilation.

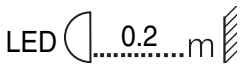

• Distance minimum des objets éclairés
Le projecteur doit être positionné de façon à ce que les objets éclairés par le faisceau lumineux soient à une distance d'au moins 0,2 mètres de l'objectif du projecteur.

• Distance minimum des substances inflammables
Le projecteur doit être positionné de façon à ce qu'il y ait une distance d'au moins 0,20 mètre entre toute substance inflammable et tout point de sa surface.

t_a 40°C

• Température ambiante maximum
Ne pas utiliser le projecteur quand la température ambiante (Ta) dépasse 40°C.

GLOW UP STRIP 100	IP65

• Degré de protection IP65
L'appareil est entièrement protégé contre la poussière (premier chiffre 6) et contre les jets d'eau (deuxième chiffre 5).

FLIGHT CASE	IP20

• Degré de protection IP20
L'appareil est protégé contre la pénétration de corps solides de dimension supérieure à 12 mm (premier chiffre 2), tandis qu'il craint les gouttes d'eau, la pluie et les projections d'eau (deuxième chiffre 0).

• Protection contre l'électrisation
L'appareil doit obligatoirement être branché à une installation d'alimentation équipée d'une mise à la terre efficace (appareil de **Classe I** selon la norme EN 60598-1).
Nous recommandons également de protéger les lignes d'alimentation des projecteurs contre les contacts indirects et/ou les courts-circuits vers la masse en utilisant des interrupteurs différentiels de sensibilité adéquate.

• Branchement au réseau d'alimentation
Les opérations de branchement au réseau de distribution de l'énergie électrique doivent être exécutées par un installateur électrique qualifié. Contrôler que la fréquence et la tension de réseau correspondent à la fréquence et à la tension pour lesquelles le projecteur est prévu ; ces données sont indiquées sur la plaquette des données électriques. Cette même plaquette reporte également la puissance absorbée. Afin d'éviter des surcharges, se référer à celle-ci pour évaluer le nombre maximum d'appareils à brancher à la ligne électrique.

t_c 90°C

• Température de la surface extérieure
La température maximum qui peut être atteinte sur la surface extérieure de l'appareil, en conditions de régime thermique, est de 90°C.

• Entretien
Avant d'entreprendre toute opération d'entretien ou de nettoyage du projecteur, couper le courant du réseau d'alimentation. Les lentilles doivent obligatoirement être montées ; de plus, si elles sont visiblement endommagées, les remplacer par des pièces détachées d'origine.

Risk Group 2
According to
EN 62471

• Sécurité photobiologique
ATTENTION : Possible radiation optique émise par ce produit.
Ne pas fixer la lampe lorsqu'elle est allumée. Peut être dangereux pour les yeux.

Le produit est conçu pour être utilisé dans les milieux suivants :
studios, scènes, théâtres, expositions, salons, événements, parcs à thème, lieux de divertissement, éclairage architectural et similaires

Non adapté à l'éclairage domestique

Non indiqué pour un utilization résidentiel

• Batterie

Ce produit contient une batterie rechargeable au tétraphosphate de fer au lithium. Une fois la batterie parvenue à la fin de sa durée de vie, procéder à son élimination conformément à la norme en vigueur de manière à éviter toute pollution.

Élimination

Ce dispositif est conforme à la Directive Européenne 2012/19/UE – Déchets d'équipements électriques et électroniques (DEEE). Dans le respect de l'environnement, écouler/recycler le produit à la fin de son cycle de vie selon les dispositions légales locales.

The products to which this manual refers comply with the European Directives pursuant to:
- 2006/95/EC - Safety of electrical equipment supplied at low voltage (LVD)
- 199/5/EC – Requirements for radio equipment (R&TTE)
- 2011/65/EU - Restriction of the use of certain hazardous substances (RoHS)
- 2009/125/EC - EcoDesign requirements for Energy-related Products (ErP)

DE INFORMATIONEN ZUR SICHERHEIT

• Installation
Sicherstellen, dass alle Teile für die Befestigung des Projektors in einwandfreiem Zustand sind.
Vor der Installation des Projektors die Stabilität der Verankerungsstelle überprüfen.
Das korrekt am Gerät eingehakte und an der Haltestruktur befestigte Sicherheitsseil muss so installiert werden, dass bei einem Nachgeben der Haupthalterung die Fallhöhe des Gerätes so gering wie möglich ist. Nach einem eventuellen Einsatz muss das Sicherheitsseil durch ein Originalersatzteil ersetzt werden.
Sicherstellen, dass der FLIGHT CASE wenn er zum Aufladen der GLOW UP verwendet wird, in mindestens 15 cm Abstand von jeglicher Oberfläche aufgestellt wird, um eine korrekte Belüftung zu gewährleisten.

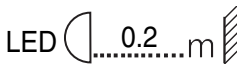

• Mindestabstand zu beleuchteten Objekten
Der Projektor muss so installiert werden, dass der Abstand zwischen den vom Lichtstrahl beleuchteten Objekten und dem Objektiv des Projektors mindestens 0.2 Meter beträgt.

• Mindestabstand zu entzündbaren Materialien
Der Projektor muss so installiert werden, dass entzündbare Materialien mindestens 0,20 Meter von jedem Punkt der Geräteoberfläche entfernt sind.

t_a 40°C

• Max. Raumtemperatur
Den Projektor nicht verwenden, wenn die Raumtemperatur (RT) 40°C überschreitet.

GLOW UP STRIP 100	IP65

• Schutzart IP65
Das Gerät ist vollständig gegen Staub (erste Ziffer 6) und gegen Wasserstrahlen (zweite Ziffer 5) geschützt.

FLIGHT CASE	IP20

• Schutzart IP20
Das Gerät ist gegen das Eindringen von festen Fremdkörpern mit Durchmesser über 12 mm (erste Kennziffer 2) geschützt, während es gegen Tropf,- Regen- und Spritzwasser sowie Wasserstrahlen (zweite Kennziffer 0) empfindlich ist.

• Schutz gegen Stromschlag
Es ist Pflicht, das Gerät an eine Stromversorgungsanlage anzuschließen, die mit einer leistungsfähigen Erdung ausgestattet ist (Gerät der **Klasse I** gemäß Richtlinie EN 60598-1).
Darüber hinaus wird empfohlen, die Zuleitungen der Projektoren mit korrekt bemessenen Fehlerstromschutzschaltern vor indirekten Kontakten und/oder Kurzschlüssen zu schützen.

• Netzanschluss
Der Anschluss an das Stromnetz muss von einem kompetenten Elektroinstallateur ausgeführt werden. Vergewissern Sie sich, dass Spannung und Frequenz der Netzversorgung mit den Werten übereinstimmen, für die der Projektor ausgelegt ist und die auf dem Typenschild angegeben sind.
Ebenfalls auf dem Typenschild ist die Leistungsaufnahme angegeben. Um zu beurteilen, wie viele Geräte maximal an die Stromleitung angeschlossen werden können, ist auf diese Angaben Bezug zu nehmen, damit Überlastungen vermieden werden.

t_c 90°C

• Temperatur der Außenfläche
Die Außenfläche des Geräts kann im Wärmebetrieb eine Höchsttemperatur von 90°C erreichen.

• Wartung
Vor Beginn von Wartungs- oder Reinigungsarbeit am Projektor, stets die Stromversorgung abschalten. Die Linsen müssen montiert sein und, falls sie sichtbar beschädigt sind, müssen sie durch Originalersatzteile ersetzt werden.

Risk Group 2
According to
EN 62471

• Photobiologische Sicherheit
ACHTUNG: Mögliche riskante optische Strahlung wird von diesem Produkt abgegeben.
Nicht die Lampe fixieren, wenn sie in Betrieb ist. Kann für die Augen gefährlich sein.

Das Produkt wurde für die Verwendung in den folgenden Bereichen entwickelt:
Studios, Bühnen, Theater, Ausstellungen, Messen, Veranstaltungen, Themenparks, Unterhaltungslokale, Architekturbeleuchtung oder ähnliches

Nicht für Haushaltsbeleuchtung geeignet

Nicht für den häuslichen Gebrauch

LiFePO4

• Batterie

Dieses Produkt enthält eine wiederaufladbare Lithium-Eisenphosphat-Batterie. Zum Schutz der Umwelt bitten wir Sie, diese Batterie, nachdem sie verbraucht ist, gemäß den geltenden Vorschriften zu entsorgen.

Entsorgung

Diese Vorrichtung entspricht der Europäischen Richtlinie 2012/19/UE - Abfall von elektrischen und elektronischen Gerätschaften (RAEE). Das Produkt am Ende seines Lebenszyklus unter Berücksichtigung der Umwelt nach den lokalen Gesetzesvorschriften entsorgen/recyceln.

The products to which this manual refers comply with the European Directives pursuant to:
- 2006/95/EC - Safety of electrical equipment supplied at low voltage (LVD)
- 199/5/EC – Requirements for radio equipment (R&TTE)
- 2011/65/EU - Restriction of the use of certain hazardous substances (RoHS)
- 2009/125/EC - EcoDesign requirements for Energy-related Products (ErP)

ES INFORMACIONES DE SEGURIDAD

• Instalación
Asegúrese de que todos los elementos de fijación del proyector estén en buenas condiciones.
Controle la estabilidad del punto de anclaje antes de instalar el proyector.
La cuerda de seguridad, correctamente enganchada al aparato y fijada a la estructura de soporte, debe colocarse de modo que, si el soporte principal cede, el aparato sufra la menor caída posible. En caso de desgaste de la cuerda de seguridad, sustitúyala por el recambio original.
Asegurarse de que el FLIGHT CASE cuando se utiliza para la recarga de los GLOW UP esté colocado a una distancia mínima de 15 cm de cualquier superficie para permitir una correcta ventilación.

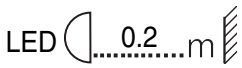

• Distancia mínima de los objetos iluminados
El proyector debe ser posicionado de modo tal que los objetos tocados por el haz luminoso tengan una distancia de al menos 0.2 metros del objetivo del mismo proyector.

• Distancia mínima de los materiales inflamables
El proyector debe ser posicionado de modo tal que los materiales inflamables tengan una distancia de al menos 0,20 metros de cada punto de la superficie del aparato.

t_a 40°C

• Máxima temperatura ambiente
No utilice el proyector si la temperatura ambiente (Ta) supera los 40°C.

GLOW UP STRIP 100	IP65

• Grado de protección IP65
El aparato está protegido totalmente contra el polvo (primera cifra 6) y contra los chorros de agua (segunda cifra 5).

FLIGHT CASE	IP20

• Grado de protección IP20
El aparato está protegido contra la penetración de cuerpos sólidos de dimensiones superiores a 12 mm (primer dígito 2), pero no contra el goteo, la lluvia, las salpicaduras y los chorros de agua (segundo dígito 0).

• Protección contra descargas eléctricas
Es obligatorio efectuar la conexión a una instalación de alimentación dotada de una eficiente puesta a tierra (aparato de **Clase I** según la norma EN 60598-1).
Además, se recomienda proteger las líneas de alimentación de los proyectores de los contactos indirectos y/o cortocircuitos hacia masa, mediante el uso de interruptores diferenciales dimensionados oportunamente.

• Conexión a la red de alimentación
Las operaciones de conexión a la red de distribución de la energía eléctrica deben ser efectuadas por un instalador eléctrico cualificado. Constate que los valores de frecuencia y tensión de la red sean iguales a los que figuran en la placa de los datos eléctricos del proyector. En la misma placa está indicada la potencia absorbida. Hacer referencia a esta última para valorar el número máximo de aparatos que conectar a la línea eléctrica, con el fin de evitar sobrecargas.

t_c 90°C

• Temperatura de la superficie externa
La temperatura máxima que puede alcanzar la superficie externa del aparato, en condiciones de régimen térmico, es de 90°C.

• Mantenimiento
Antes de iniciar cualquier operación de mantenimiento o limpieza en el proyector quitar la tensión de la red de alimentación. Las lentes tienen que montarse obligatoriamente; además, si estuvieran dañadas, deberán ser sustituidas por recambios originales.

Risk Group 2
According to
EN 62471

• Seguridad fotobiológica
ATENCIÓN. No mire directamente a la fuente de luz.
No mire el haz de luz con instrumentos ópticos u otros instrumentos que puedan causar convergencia de luz.

El producto es concebido para ser utilizado en los siguientes ambientes:
estudios, palcos, teatros, exposiciones, ferias, eventos, parques temáticos locales de entretenimiento, iluminación de arquitecturas y similares

No es apropiado para la iluminación doméstica

No para uso residencial

• Batería

Este producto contiene una batería recargable plomo-ácido o de Litio Tetrafosfato Hierro. Para proteger el ambiente se ruega eliminar la batería conforme a la normativa vigente.

Eliminación

Este dispositivo es conforme a la Directiva Europea 2012/19/UE - Residuos de equipos eléctricos y electrónicos (RAEE). Con el fin de respetar el ambiente, eliminar/reciclar el producto al final de su ciclo de vida según las disposiciones de ley locales.

The products to which this manual refers comply with the European Directives pursuant to:
- 2006/95/EC - Safety of electrical equipment supplied at low voltage (LVD)
- 199/5/EC – Requirements for radio equipment (R&TTE)
- 2011/65/EU - Restriction of the use of certain hazardous substances (RoHS)
- 2009/125/EC - EcoDesign requirements for Energy-related Products (ErP)

UNPACKING AND PREPARATION

1

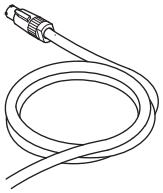

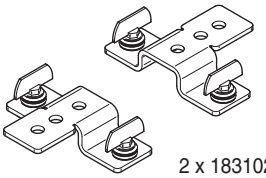

2 x 183102/805

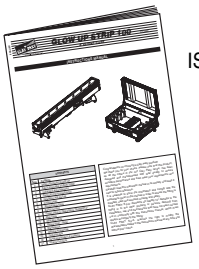

IST003/001

Packing content - Fig. 1

REMOVAL OF THE PROTECTIVE FILM

2

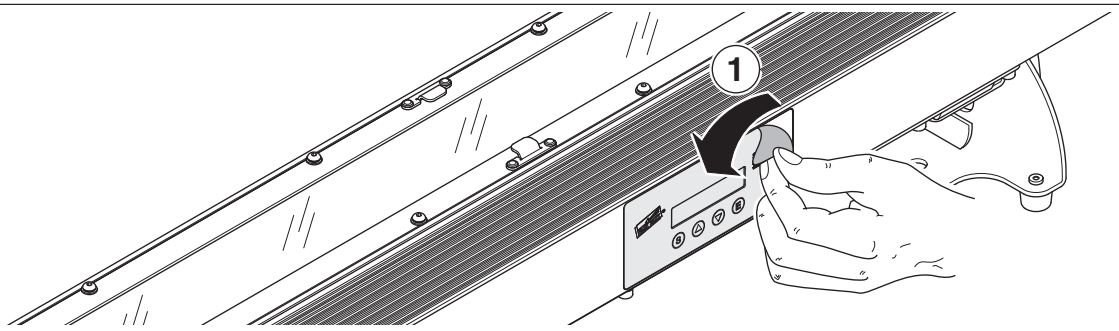

INSTALLATION AND START-UP

3

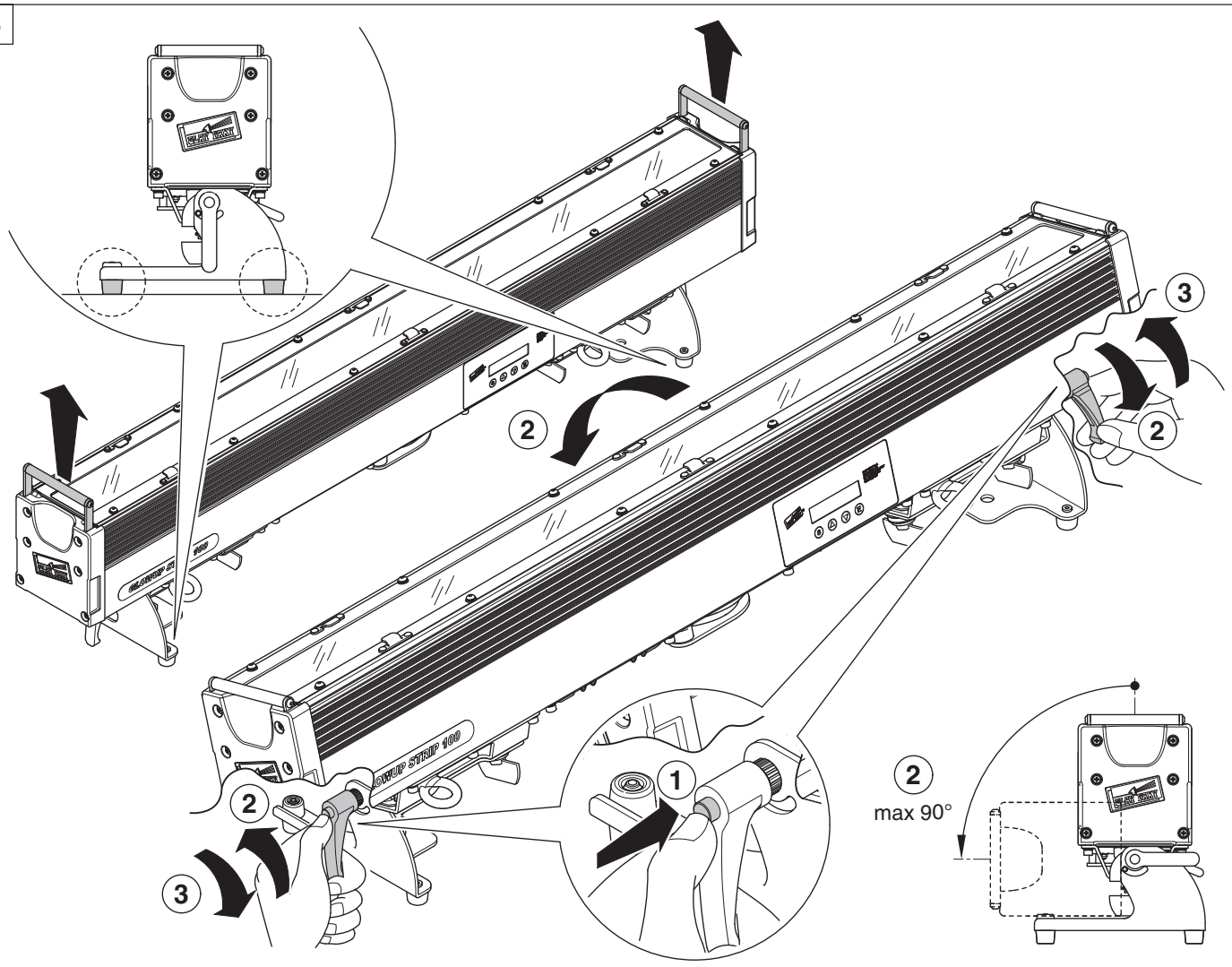

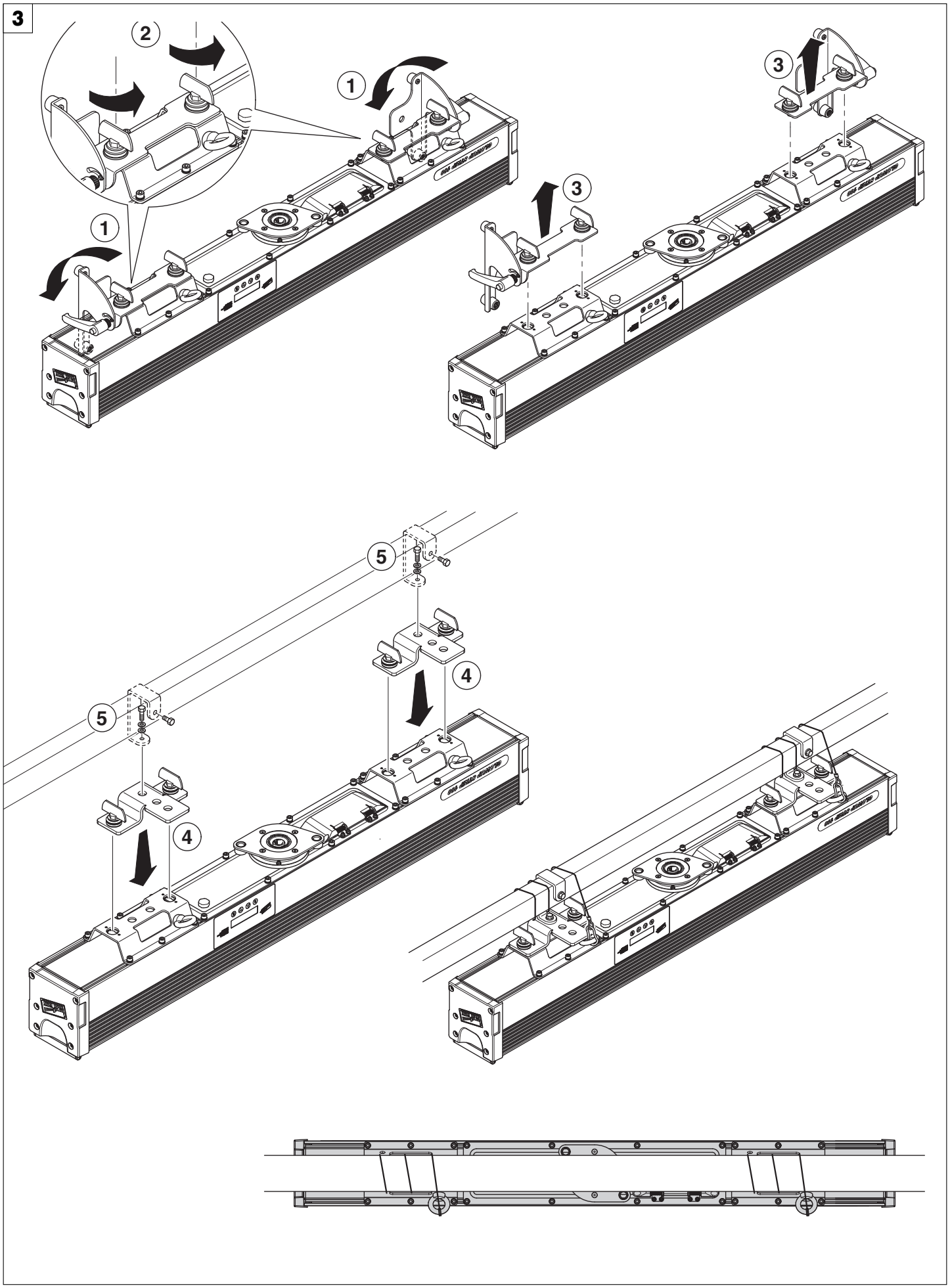

Projector installation - Fig. 3

The projector can be installed on the floor resting on specific rubber feet, on a truss, on the ceiling or wall.

WARNING: the safety chain must be installed except when the projector rests on the floor. (Code 105015/801 available upon request). This must be secured to the projector support structure and then hooked to the fastening point at the centre of the base.

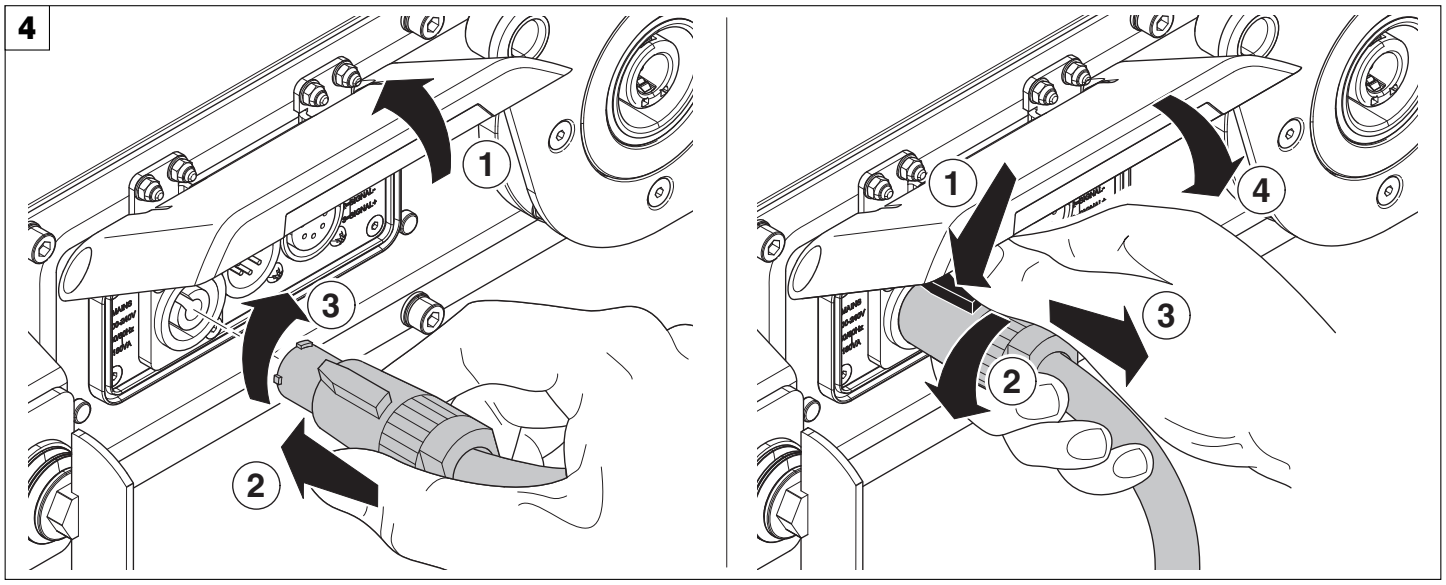

Connecting and disconnecting the power cord - Fig. 4
When connecting the power cord the user can choose whether to use the GLOW UP in one of the following ways:
1) Power cord connected for battery charge.
2) Power cord connected for projector power (thus bypassing battery operations).
The GLOW UP cannot work in both ways simultaneously.

CONTROL PANEL

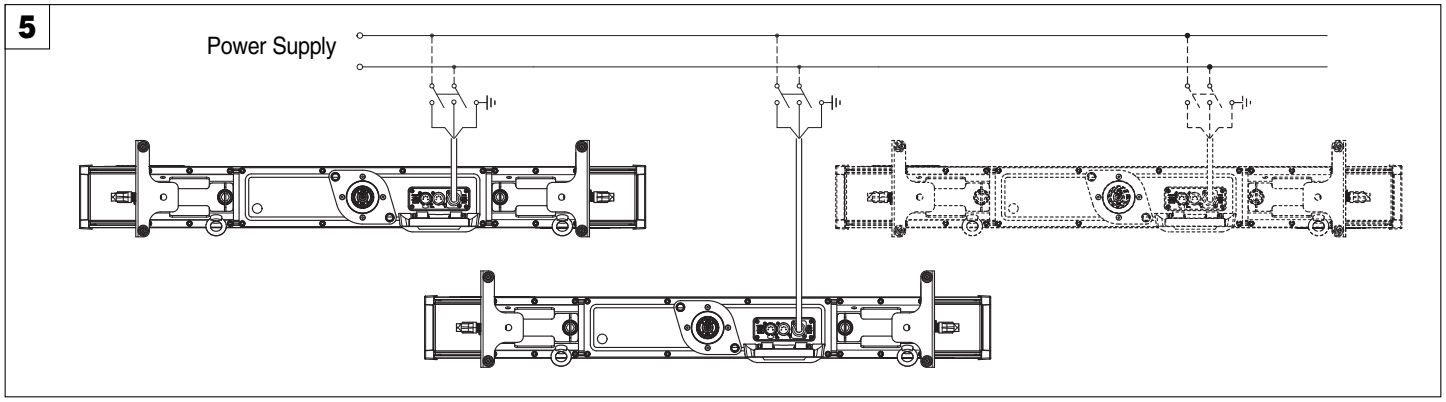

Connections to the power mains - Fig. 5

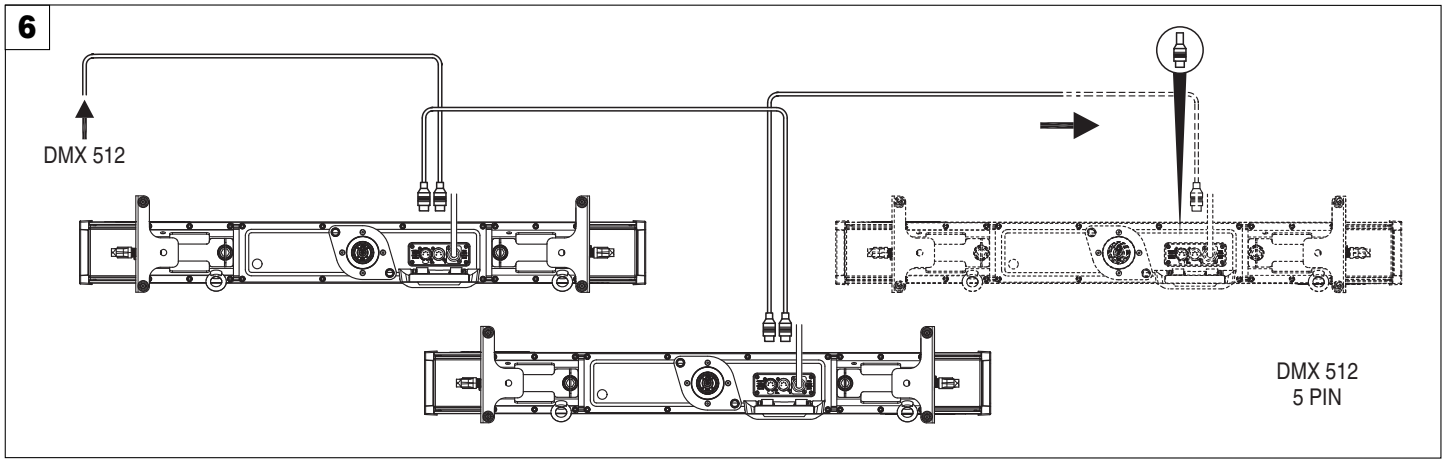

Connections to the control signal line (DMX) - Fig. 6
Use a cable conforming to specifications EIA RS-485: 2-pole twisted, shielded, 120Ω characteristic impedance, 22-24 AWG, low capacity. Do not use microphone cable or other cable with characteristics differing from those specified. End connections must be made using XLR type 3-pin male/female connectors. A terminating plug must be inserted on the last projector with a resistance of 120 (minimum 1/4 W) between terminals 2 and 3.
IMPORTANT: The wires must not make contact with each other or with the metal casing of the connectors. The casing must be connected to the shield braid and pin 1 of the connectors.

7

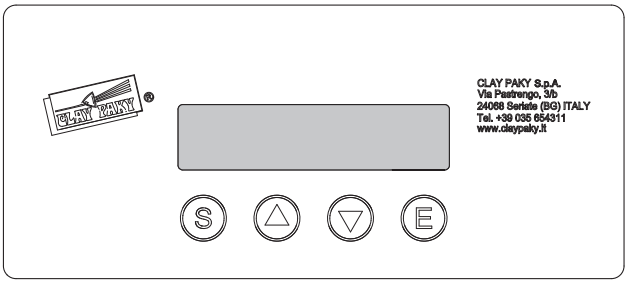

Switching on the projector - Fig. 7

The projector immediately turns on when the power cord is plugged in or, if used in battery mode, by pressing and holding down keys Ⓔ and Ⓢ for several seconds.

Clay Paky **GLOW UP STRIP 100**	**GLOW UP STRIP 100** **Software release x.x x**	**Address xxx BAT xx%** **xxxxx ??? ***

* see pag. 7
Display symbology

The control panel (Figure 8) has a display and buttons for complete programming and management of the projector menu.
The display can be in one of two conditions: idle status and settings status. When idle, the projector DMX address and percent battery charge are displayed. If no button is pressed after a wait period (about 60 seconds) when in menu settings status, the display automatically returns to idle status. It should be noted that when this condition occurs, any modified value that has not yet been confirmed with the Ⓔ key will be cancelled.
To turn off the GLOW UP, hold down keys Ⓔ and Ⓢ for several seconds. A confirmation message will appear (Switch off?).
Press Ⓔ-Yes to turn off the GLOW UP or press Ⓢ-NO to return to the settings menu.

When GLOW UP is in idle status the information page will appear on the display:

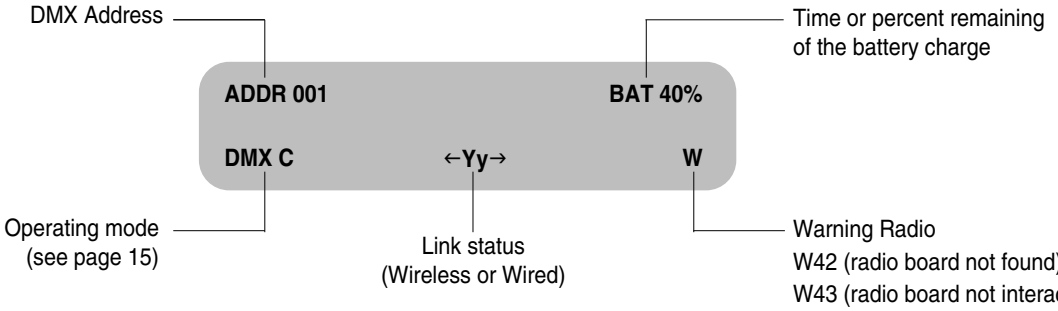

Display symbology - (Link Status)

Transmission to DMX cable		Reception DMX from Radio (wireless)	
Reception from DMX cable		Transmission DMX from Radio (wireless)	

Initial projector address settings

An initial address must be set on each single project for the control signal. Address settings: see page 8 or 11.

Button functions – Menu SET

SELECT Ⓢ	• **If pressed in idle status:** Cyclically switches between idle status and menu settings. • **If pressed while setting a menu:** Moves to an upper level without changing anything (exits the function)
DOWN	Decreases the value displayed (with auto-repetitions), or passes to the next item on the menu For quick access to the minimum parameter value, press the UP key while holding down the DOWN key.
UP	Increases the value displayed (with auto-repetitions), or passes to the previous item on the menu For quick access to the maximum parameter value, press the DOWN key while holding down the UP key.
ENTER Ⓔ	Confirms the displayed value or activates the displayed function or opens the next menu.

SHORTCUT KEYS MENU

By pressing the ENTER Ⓔ key and UP ⏶, the DMX address setting function can be quickly accessed.

By pressing the ENTER Ⓔ key and DOWN ⏷, it is possible to assign the desired command to the GLOW UP Radio module:

1) Use the UP ⏶ and DOWN ⏷ keys to select one of the following settings:
   Unlink Transmitter – Disconnected from the transmitter
   Link Receivers – Connected to all free receivers
   Unlink Receiver – Disconnected from all receivers
   Select Card (see page 11)
   Config Card (see page 11)
2) Press ENTER Ⓔ to confirm the selection (the display blinks for several seconds) or SELECT Ⓢ to keep the current settings and return to the previous Menu.

BUTTON FUNCTION

By pressing any button when GLOW UP is in idle status, the BUTTON FUNCTION menu is accessed.

Symbol	**SET**	▶ or ⏸	■	**MOD**
Function	Setting	Play/Pause	Stop	Mode

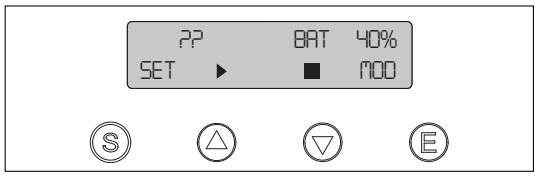

Press SET SELECT Ⓢ to access the menus (see page 9):
Program
DMX Address
Advanced (Menu use is recommended for qualified technical personnel.)

Press ENTER Ⓔ MOD to select the GLOW UP operating mode

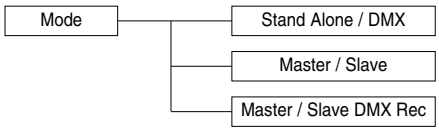

Use the UP ⏶ e DOWN ⏷ keys to select the mode from those available:

Stand Alone / DMX – Press ENTER Ⓔ to confirm (runs "Unlink Transmitter", receives the DMX at the pre-set address; by using the PLAY ▶ key, a scene may be chosen to be run locally and the DMX being inactive)

Master/Slave (The "Transmitter" transmits to the "Receivers" the default programme in PLAY) - Press ENTER Ⓔ and select the mode from those available:
- **Receiver** enables established wired or wireless reception and reads channels, starting from channel DMX 1, without changing the pre-set DMX address.
- **Transmitter** enables established wired or wireless transmission, transmits starting from channel DMX 1, without changing the pre-set DMX address.

Master/Slave DMX Rec (The "Transmitter" transmits the DMX recording to the "Receivers") - Press ENTER E and select the mode from those available:
- **Receiver** enables established wired or wireless reception and reads channels, starting from the pre-set DMX address.
- **Transmitter** enables established wired or wireless transmission, transmits starting from the pre-set DMX address.

NOTE: in a GLOW UP series which is part of a battery, it is imperative to first select all the receivers and finally select the Transmitter.

▶ ⏸
PLAY/PAUSE UP ⏶ key: activates or pauses a particular mode.

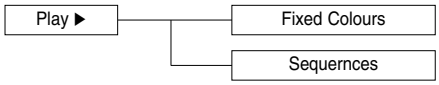

By pressing the PLAY ▶ UP ⏶ button, the sub-menu can be accessed:
Fixed Colours: it is possible to associate a bit value to each GLOW UP channel or you can select a color from the stored ones by accessing the **Preset Colors** menu (see table on page 8). It is possible to mix Strobo and Dimmer with any preset color channel.

Sequence: it is possible to associate **Speed** and **Fade** of the pre-set Sequences (Preset 1,2,3)

■
STOP ■ DOWN ⏷ key: deactivates the active programme.

PRESET COLORS FOR STAND ALONE

Colour		Reference	Bit value			
			R	G	B	W
01	RGBW	-	0	0	0	0
02	RED	-	255	0	0	0
03	GREEN	-	0	255	0	0
04	BLUE	-	0	0	255	0
05	YELLOW	-	255	255	0	0
06	CYAN	-	0	250	185	0
07	MAGENTA	-	255	0	140	0
08	WHITE	-	0	0	0	100
09	ORANGE	-	255	115	0	0
10	PINK	-	127	0	0	100
11	VIOLET	-	255	0	184	200
12	AQUA	-	85	255	105	0
13	SKY BLUE	-	118	255	150	0
14	FULL WHITE	-	255	255	255	255
15	COOL WHITE	-	225	255	253	255
16	WARM WHITE	-	255	255	220	255
17	WHITE 3200	-	255	176	0	255
18	WHITE 2500	-	255	99	0	255
19	YELLOW 2	LEE 101	133	145	0	0
20	STRAW	LEE 103	255	255	0	240
21	ORANGE	LEE 105	246	195	0	0
22	LIGHT ROSE	LEE 107	218	0	0	255
23	DARK PINK	LEE 111	255	0	120	255
24	MAGENTA	LEE 113	255	0	78	0
25	BLUE 2	LEE 115	0	255	175	0
26	MED BLUE GREEN	LEE 116	0	255	160	0
27	DARK BLUE	LEE 119	0	180	180	0
28	BRIGHT PINK	LEE 128	255	0	141	95
29	MEDIUM BLUE	LEE 132	0	255	200	0
30	GOLDEN AMBER	LEE 134	255	175	0	25
31	DEEP GOLDEN AMBER	LEE 135	255	140	0	25
32	PALE LAVENDER	LEE 136	0	0	100	190
33	APRICOT	LEE 147	152	122	0	76
34	DARK LAVENDER	LEE 180	0	114	144	112
35	CHOCOLATE	LEE 156	238	189	0	227
36	JUST BLUE	LEE 079	0	187	175	0
37	SURPRISE PINK	LEE 194	78	0	0	255
38	SCARLET	LEE 024	255	0	58	113
39	SURPRISE PEACH	LEE 017	145	0	0	153
40	FIRE	LEE 019	255	141	44	0
41	ENGLISH ROSE	LEE 108	161	119	0	255
42	MAUVE	LEE 126	255	0	208	150
43	BRIGHT BLUE	LEE 141	0	255	186	37
44	ALICE BLUE	ROSCO 378	0	255	223	140
45	ROSE INDIGO	ROSCO 358	0	0	255	133
46	URBAN BLUE	ROSCO 081	0	255	187	35
47	COOL BLUE	ROSCO 066	0	255	148	153
48	LIGHT SALMON	ROSCO 030	255	112	0	162
49	MAYAN SUN	ROSCO 318	150	114	0	162
50	CHERRY ROSE	ROSCO 332	255	0	92	0
51	FLESH PINK	ROSCO 034	255	0	132	255
52	SKELTON EXOTIC SANGRIA	ROSCO 039	255	0	180	100

MENU SET

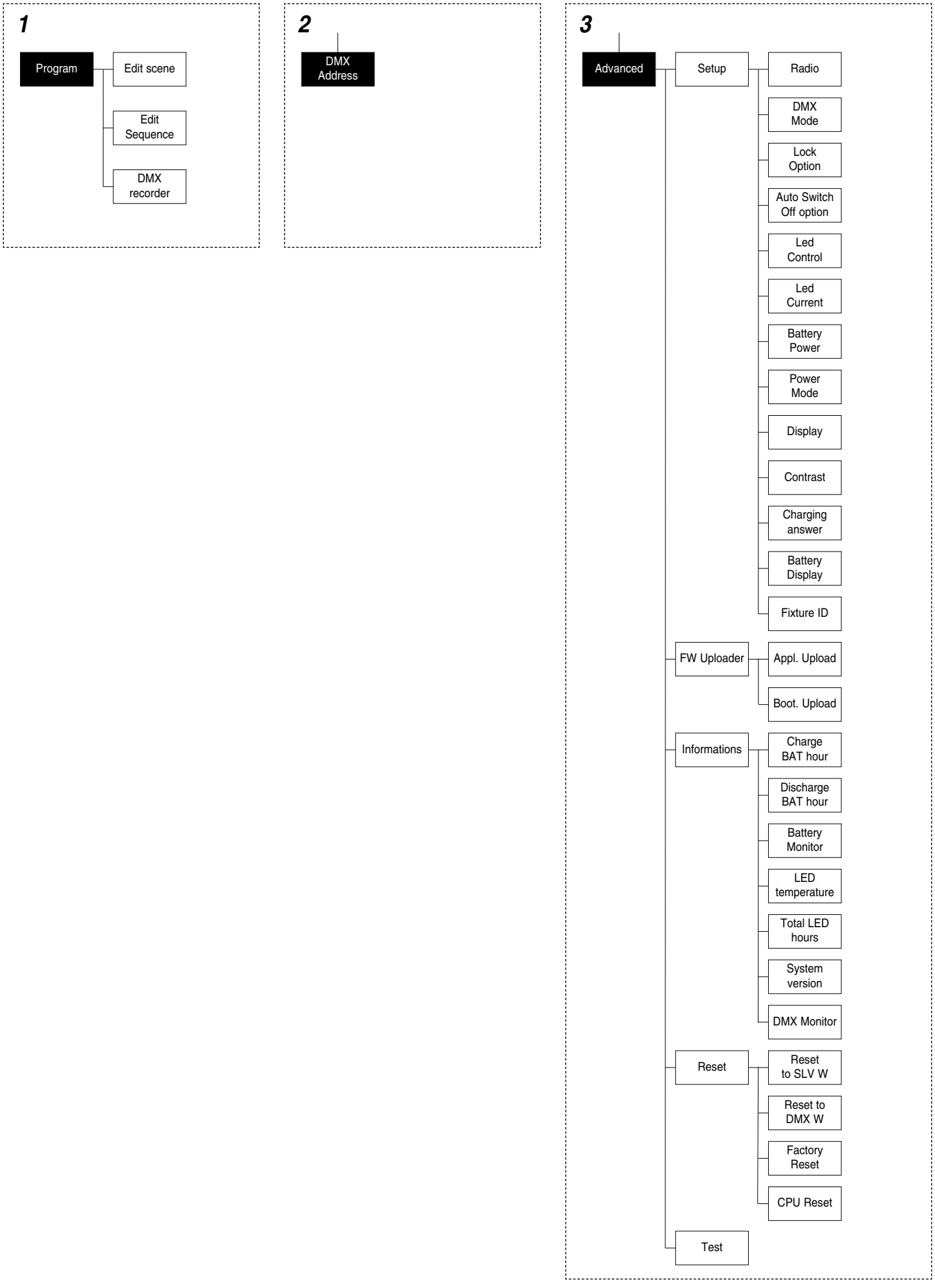
1
Program
Edit scene
Edit Sequence
DMX recorder
2
DMX Address
3
Advanced
Setup
Radio
DMX Mode
Lock Option
Auto Switch Off option
Led Control
Led Current
Battery Power
Power Mode
Display
Contrast
Charging answer
Battery Display
Fixture ID
FW Uploader
Appl. Upload
Boot. Upload
Informations
Charge BAT hour
Discharge BAT hour
Battery Monitor
LED temperature
Total LED hours
System version
DMX Monitor
Reset
Reset to SLV W
Reset to DMX W
Factory Reset
CPU Reset
Test

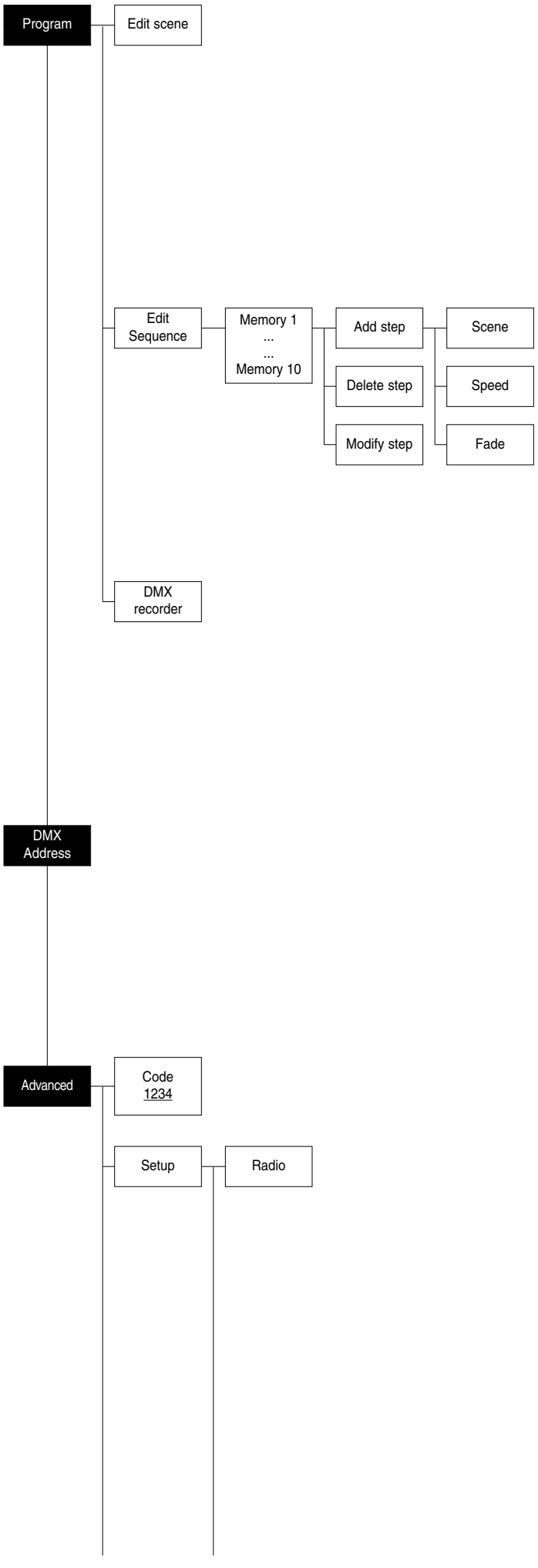

PROGRAM MENU

EDIT SCENE

To create/overwrite/modify a SCENE customised by the user:

1) Press ENTER (E) – SCENE 1 appears on the display.
2) Use the UP (▲) and DOWN (▼) keys to select from the ten available SCENES.
3) Press ENTER (E) to open a SCENE.
4) A value can be associated with each GLOW UP channel inside each SCENE using the UP (▲) and DOWN (▼) keys.
5) When finished with settings, press SELECT (S). A confirmation message appears: SAVE SCENE X ?.
6) Press ENTER (E) to confirm and save the SCENE or SELECT (S) to return to the previous menu.

EDIT SEQUENCE

Allows you to create a sequence, made up of a series of SCENES saved by the user.

1) Press ENTER (E) – MEMORY 1 appears on the display.
2) Use the UP (▲) and DOWN (▼) keys to select one of the ten MEMORIES available.
3) Press ENTER (E) to access the MEMORY
4) Press ENTER (E) to access the MEMORY and add/delete/modify STEPS with SCENE/SPEED/FADE as required.
5) Press ENTER (E) to confirm the selection or SELECT (S) to return to the previous Menu.

DMX RECORDER

To record a scene sequence programmed on the unit.
The projector must be set to Slave --> Receiver in order to accept a recording. Press ENTER (E) and reset the "Memory" by pressing ENTER (E) again. GLOW UP is now ready to store control unit DMX data (DMX waiting ...).
On completing the recording, press ENTER (E) to save, otherwise press SELECT (S) Esc.

DMX ADDRESS MENU

DMX ADDRESS

Allows the user to set the DMX address to be assigned to the projector.

1) Press ENTER (E) – the current DMX address appears on the display.
2) Use the UP (▲) and DOWN (▼) keys to set the DMX address.
3) Press ENTER (E) to confirm the selection (the display blinks for several seconds) or SELECT (S) to keep the current settings and return to the previous Menu.

ADVANCED MENU

To enable the "Advanced Menu" set up the "Access code" (1234) using the UP (▲), DOWN (▼), RIGHT (▶) keys.
Press (OK) - "Menu advanced" appears on the display

RADIO

Assigns the desired command to the GLOW UP Radio module Radio.

1) Press ENTER (E) – current settings appear on the display.
2) Use the UP (▲) and DOWN (▼) keys to select one of the following settings:
   Unlink Trasmitter – Disconnected from the transmitter
   Link Receivers – Connected to all free receivers
   Unlink Receiver – Disconnected from all receivers
   Select Card – it allows you to select the type of Radio card that is installed or to be installed between the 2 available LM card and WS card **Config. Card**
   Tx mode – allows the user to select either the G3 or G4 transmission channels. Press ENTER (E) and use the UP (▲) e DOWN (▼) keys to select one of the two available channels.
   RDM discovery – to be used only when the wireless card is replaced; press ENTER (E) to start the automatic search option.
3) Press ENTER (E) to confirm the selection (the display blinks for several seconds) or SELECT (S) to keep the current settings and return to the previous Menu.

Continued ➔

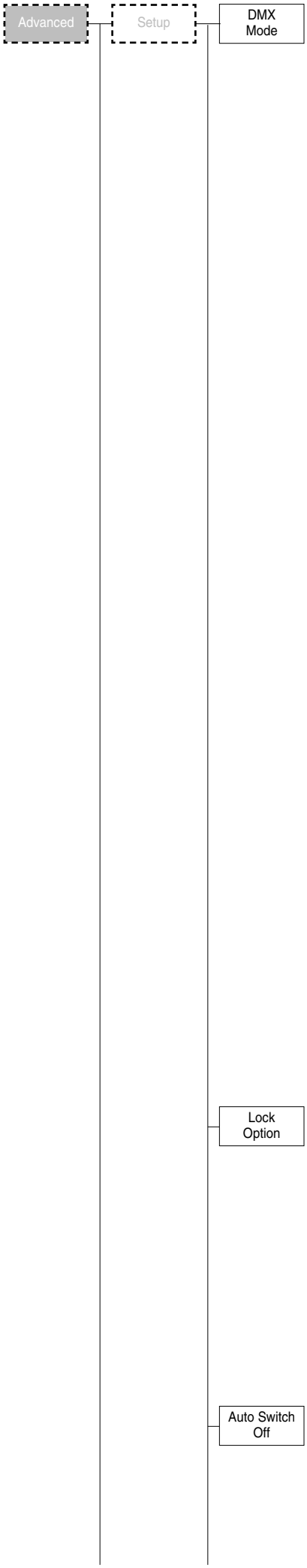

DMX MODE

Assigns the desired command to the GLOW UP Radio module

1) Press ENTER Ⓔ – current settings appear on the display.
2) Use the UP ⏶ and DOWN ⏷ keys to select one of the following settings:

- **SLAVE PRIORITY**: GLOW UP runs as a Slave
  Press ENTER Ⓔ and use the UP ⏶ and DOWN ⏷ keys to select the DMX signal reception priority in case of conflict between the cable and wireless signals
  • **Cable** (default)
  • **Wireless**
  Press ENTER Ⓔ to confirm the selection (the display blinks for several seconds) or SELECT Ⓢ to keep the current settings and return to the previous Menu.

- **MASTER OUTPUT**: GLOW UP runs as a Master
  Press ENTER Ⓔ and use the UP ⏶ and DOWN ⏷ keys to select how the DMX signal should be sent to other devices:
  Cable+Wireless
  Cable
  Wireless
  Press ENTER Ⓔ to confirm the selection (the display blinks for several seconds) or SELECT Ⓢ to keep the current settings and return to the previous Menu.

- **REPEATER**: GLOW UP runs as a repeater
  Press ENTER Ⓔ and use the UP ⏶ and DOWN ⏷ keys to select how to run GLOW UP as a repeater: :
  Direction – Press ENTER Ⓔ again and use the UP ⏶ and DOWN ⏷ keys to select whether the repeater should transmit the DMX signal from:
  -Wireless to Cable
  -Cable to Wireless
  Press ENTER Ⓔ to confirm the selection (the display blinks for several seconds) or SELECT Ⓢ to keep the current settings and return to the previous Menu.

  Function– Press ENTER Ⓔ again and use the UP ⏶ and DOWN ⏷ keys to select whether the repeater should run from:
  - Repeat & Play (GLOW UP repeats and plays)
  - Repeat Only (GLOW UP operates in repeat mode only)
  Press ENTER Ⓔ to confirm the selection (the display blinks for several seconds) or SELECT Ⓢ to keep the current settings and return to the previous Menu.

  Enable/Disable
  Press ENTER Ⓔ to confirm the selection (the display blinks for several seconds) or SELECT Ⓢ to keep the current settings and return to the previous Menu.

LOCK OPTION

It lets you assign a lock password, requested at each projector start up. The same password can be used to access the "Menu Advanced".

1) Press ENTER Ⓔ and access the **Lock** menu to enable ON or disable OFF the password request at start up.
   - Select ON to enable. The previously entered password is displayed and the desired numerical password can be entered with the UP ⏶ e DOWN ⏷ and ENTER Ⓔ keys.
   - By selecting OFF, no password will be requested at projector start up.
2) Access the **Set Password** menu and use the UP ⏶, DOWN ⏷ and ENTER Ⓔ keys to assign the desired Password number.

AUTO SWITCH-OFF OPTION

Lets you enable G.U.S. 100 shutdown in the event of disuse for more than 4h, when battery powered.

1) Premere ENTER Ⓔ sul display appare l'impostazione corrente.
2) Con i tasti UP ⏶ e DOWN ⏷, abilitare ON o disabilitare OFF l'opzione.
3) Press ENTER Ⓔ to confirm the selection (the display blinks for several seconds) or SELECT Ⓢ to keep the current settings and return to the previous Menu.

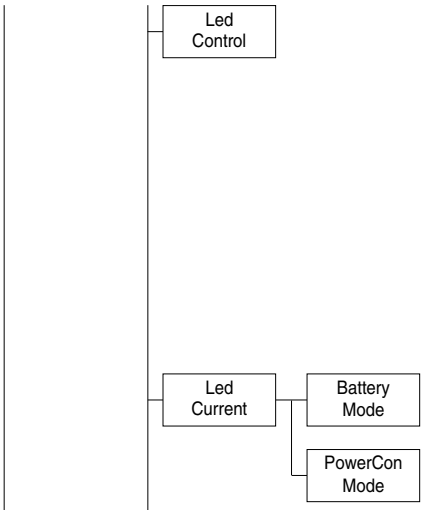

LED CONTROL

It allows you to select the operating mode of the GLOW UP Strip 100 between the two available:

1) Press ENTER Ⓔ – the current setting appears on the display.
2) Use the UP ⏶ and DOWN ⏷ keys to select one of the following settings:
   Common Mode: all LEDS are on simultaneously (page 22)
   Single Mode: The LEDS are divided into 2 sets of 5 LEDS each (page 23).
   Press ENTER Ⓔ to confirm the selection (the display blinks for several seconds) or SELECT Ⓢ to keep the current settings and return to the previous Menu.

LED CURRENT

This allows you to set an operating current value for the Glow UP Strip 100 LED, whether it is running in Battery or PowerCon mode.

1) Press ENTER Ⓔ – BATTERY MODE / POWERCON MODE appears on the screen.
2) Use the UP ⏶ and DOWN ⏷ buttons to select one of the 2 options.
3) Press ENTER Ⓔ.
4) Use the UP ⏶ and DOWN ⏷ to select 700mA or 1000mA, it is possible to associate different values depending on the selected operating mode, (Battery Mode default: 700ma / PowerCon Mode default: 1000mA).
5) Press ENTER Ⓔ to confirm or press SELECT Ⓢ to return to the previous Menu.

BATTERY POWER

It allows you to assign a maximum battery charge power (default 50%). The higher the assigned percentage, the lower the battery charge duration and vice versa.

1) Press ENTER Ⓔ – the current setting appears on the display.
2) Use the UP ⏶ and DOWN ⏷ keys to increase or decrease the percentage to be attributed (minimum value 40%).
   Press ENTER E to confirm the selection (the display blinks for several seconds) or SELECT Ⓢ to keep the current settings and return to the previous Menu.

POWER MODE

Lets you select the set G.U.S. 100 power type.

1) Press ENTER – current settings appear on the display.
2) Use the UP and DOWN keys to select one of the 3 following options:
   AC Mode: only runs with mains power, in the event of power outage, the G.U.S. 100 turns off.
   BATTERY Mode: directly battery powered when turned on without mains power; if mains power is on or connected later, it automatically charges to 100% maximum charge and then stops charging; if mains power is turned off, it turns off (as with flight case).
   MIXED Mode (default): mixed operations, as per first firmware release.
3) Press ENTER to confirm the selection (the display blinks for several seconds) or SELECT to keep the current settings and return to the previous Menu.

DISPLAY

Allows you to dim the display backlight 60 seconds after switching to idle status. To turn it back on, simply press any key.

1) Press ENTER Ⓔ – current settings appear on the display.
2) Use the UP ⏶ and DOWN ⏷ keys to turn display backlight OFF or ON.
3) Press ENTER Ⓔ to confirm the selection (the display blinks for several seconds) or SELECT Ⓢ to keep the current settings and return to the previous Menu.

CONTRAST

Lets the user modify display contrast.

1) Press ENTER Ⓔ – current settings appear on the display.
2) Use the UP ⏶ and DOWN ⏷ keys to modify the value from 0 to 10 according to the desired contrast.
3) Press SELECT Ⓢ to return to the previous Menu.

Continued ➔

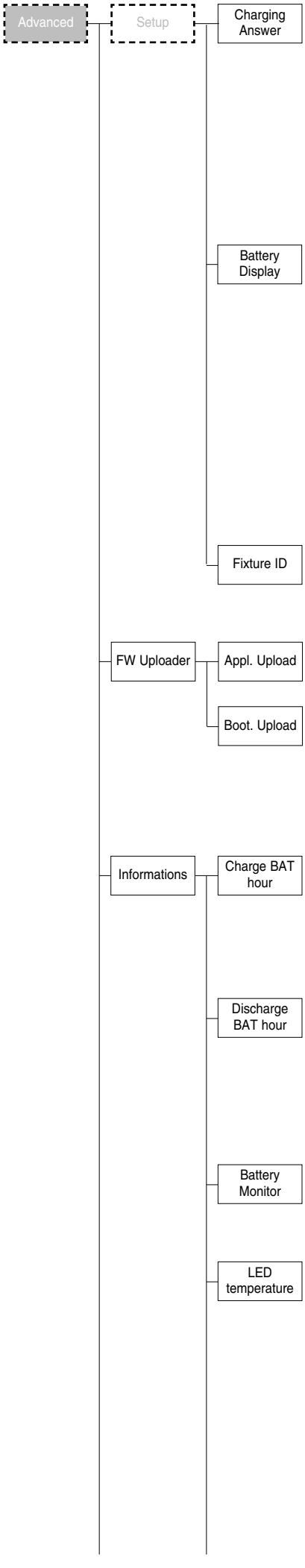

CHARGING ANSWER

This allows a default answer can be assigned for the battery charging request, when the GlowUp Strip is powered by the relative power cable (powercon):

- On selecting YES, it will automatically switch to the powered by battery status 1 minute after the GlowUp Strip cord is connected to the mains.
- On selecting NO, it will automatically switch to the powered by cable status (excluding the battery mode) 1 minute after the GlowUp Strip cord is connected to the mains.

BATTERY DISPLAY

Allows you to select how to display the battery charge in idle status.

1) Press ENTER Ⓔ – current settings appear on the display.
2) Use the UP ⏶ and DOWN ⏷ keys to select one of the 3 following options:
   Automatic: displays the remaining battery charge in hours or as a percentage.
   Percentual: displays the percentage of remaining battery charge.
   Time left: displays the remaining time of the battery charge in hours.
3) Press ENTER Ⓔ to confirm the selection (the display blinks for several seconds) or SELECT Ⓢ to keep the current settings and return to the previous Menu.

FIXTURE ID

Allows you to display the GLOW UP ID address.

1) Press ENTER Ⓔ – the ID address appears on the display.

FW UPLOADER

Used to transfer software (Application o Boot) from one projector to all other connected projectors.

1) Press ENTER Ⓔ use the UP() e DOWN() keys to select:
   Cable upload: to start the firmware upload via DMX cable.
   Radio upload: to start the firmware upload via wireless
2) Press ENTER Ⓔ to transfer firmware or SELECT Ⓢ to return to the previous Menu.

CHARGE BATTERY HOURS

This option allows the user to view the total number of battery load hours from construction to today.

1) Press ENTER Ⓔ – total charge hours appear on the display.
2) Press SELECT Ⓢ to return to the previous Menu.

DISCHARGE BATTERY HOURS

Displays total GLOW UP battery powered operating hours from last time used, from construction to today.

1) Press ENTER Ⓔ – total battery powered operating hours appear on the display.
2) Press SELECT Ⓢ to return to the previous Menu.

BATTERY MONITOR

Press the ENTER Ⓔ key on the display to view the voltage and current status of the battery.

LED TEMPERATURE

Displays the LED working temperature.

1) Press ENTER Ⓔ – two options appear on the display:
   Temperature (real-time LED temperature)
   Max Temperature (maximum temperature measured on LEDs)
2) Use the UP ⏶ and DOWN ⏷ keys to select which of the two temperature items to be displayed.
3) Press ENTER Ⓔ to display or SELECT Ⓢ to return to the previous menu.

To reset the **"Max Temperature"** value, simultaneously press and hold down the UP ⏶ and DOWN ⏷ keys for several seconds. When "Rst?" (Reset) appears, confirm by pressing ENTER Ⓔ.

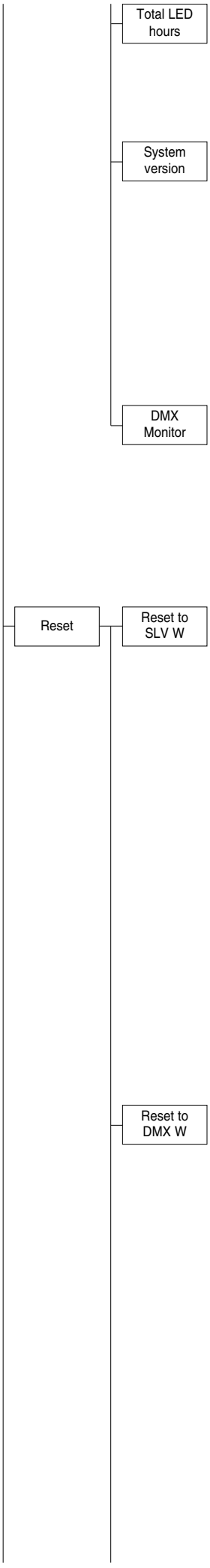

TOTAL LED HOURS

Displays total LED working hours, from construction to today.

1) Press ENTER (E) – total LED working hours appear on the display.
2) Press SELECT (S) to return to the previous Menu.

SYSTEM VERSION

Displays the version of the firmware loaded on the CPU board.

1) Press ENTER (E) – two options appear on the display:
   Application release
   Boot release (Backup Software)
2) Use the UP (▲) and DOWN (▼) keys to select which of the two firmware version items to be displayed.
3) Press ENTER (E) – the release appears on the display.
4) Press SELECT (S) to return to the previous Menu.

DMX MONITOR

Displays the DMX input level in bit for each GLOW UP channel.

1) Press ENTER (E) – the first channel appears on the display.
2) Use the (▲) and DOWN (▼) keys to select the channel.
3) Press ENTER (E) to display the channel DMX level (value between 0 and 255).
4) Press SELECT (S) to return to the previous Menu.

RESET TO SLAVE WIRELESS

Resets GLOW UP and automatically sets the SLAVE WIRELESS settings.

1) Press ENTER (E) – a confirmation message appears on the display (OK?)
2) Press ENTER (E) to RESET or SELECT (S) to return to the previous Menu.

Default after reset:
“Master Output”-> "Cable + Wireless"
"Repeater"-> "Disable"
"Repeater"-> "Function"->"Repeat & Play"
"Repeater"-> "Direction"->"Wirel. to Cable"
“DMX address” = 1
"Display"-> Off
“Contrast” = 5
“MOD”-> "Master/Slave" -> ”Receiver”
"Slave Priority"-> "Wireless
"Power Mode" -> "Mixed Mode"
"Auto SwitchOff Opt. -> "On"

RESET TO DMX WIRELESS

Resets GLOW UP and automatically sets the DMX WIRELESS settings.

1) Press ENTER (E) – a confirmation message appears on the display (OK?)
2) Press ENTER (E) to RESET or SELECT (S) to return to the previous Menu.

Default after reset:
“Master Output”-> "Cable + Wireless"
"Repeater"-> "Disable"
"Repeater"-> "Function"->"Repeat & Play"
"Repeater"-> "Direction"->"Wirel. to Cable"
“DMX address” = 1
"Display"-> Off
“Contrast” = 5
“MOD”-> "Stand Alone/DMX"
"Power Mode" -> "Mixed Mode"
"Auto SwitchOff Opt. -> "On"

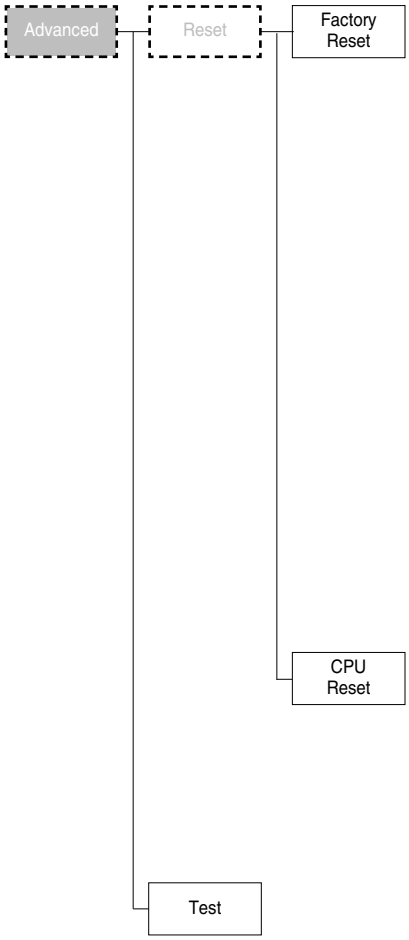

FACTORY RESET

Resets GLOW UP and automatically sets the Factory Default settings.

1) Press ENTER (E) – a confirmation message appears on the display (OK?)
2) Press ENTER (E) to RESET or SELECT (S) to return to the previous Menu.

Default after reset:
“Master Output”-> "Cable + Wireless"
"Repeater"-> "Disable"
"Repeater"-> "Function"->"Repeat & Play"
"Repeater"-> "Direction"->"Wirel. to Cable"
‘’DMX address’’ = 1
"Display"-> Off
“Contrast” = 5
“MOD”-> "Stand Alone/DMX"
"Slave Priority"-> "Cable"
"Led Current -> Battery Mode: 700mA / PowerCon Mode: 1000mA
"Power Mode" -> ''Mixed Mode''
''Auto SwitchOff Opt. -> ''On''

CPU RESET

Used to reset the CPU. Settings will not be reset.

1) Press ENTER (E) – a confirmation message appears on the display (OK?)
2) Press ENTER (E) to RESET or SELECT (S) to return to the previous Menu.

TEST

Used to test the correct operations of effects.

1) Press ENTER (E).
2) Use the (▲) and DOWN (▼) keys to select the Test function.
3) Press ENTER (E) to confirm the select and start the TEST or SELECT (S) to keep current settings.

Please pay attention to the document '' Firmware Revison History '' (www.claypaky.it) to verify if some change was introduced in the functions of the user Menu.

OPERATING MODES

NOTE: the Wireless board is not two-way, therefore the following functions are excluded:
1) Repeater from Wireless to Wireless.
2) Receiving and transmitting wireless at the same time.

Operating Mode	Slave Priority	Repeater	Master Output	Display
Stand Alone / DMX in play/pause	-	Off	-	PLAY (o PAUSE)
	-	Wireless to Cable + Repeat &Play	-	PLAYW→C (o PAUSW→C)
	-	Cable to Wireless + Repeat & Play	-	PLAYC→W (o PAUSC→W)
	-	Wireless to Cable + Repeater only	-	W→C
	-	Cable to Wireless + Repeater only	-	C→W
Stand Alone / DMX in stop	Cable	Off	-	DMX C
	Wireless	Off	-	DMX W
	-	Wireless to Cable + Repeat &Play	-	DMXW→C
	-	Cable to Wireless + Repeat &Play	-	DMXC→W
	-	Wireless to Cable + Repeater only	-	W→C
	-	Cable to Wireless + Repeater only	-	C→W
Master Slave Tx (master addr 1)	-	-	Cable	MAST C
	-	-	Wireless	MAST W
	-	-	Cable+Wireless	MAST CW
Master Slave Rx (slave addr 1)	Cable	Off	-	SLV C
(Play disabled)	Wireless	Off	-	SLV W
	-	Wireless to Cable + Repeat &Play	-	SLV W→C
	-	Cable to Wireless + Repeat &Play	-	SLV C→W
	-	Wireless to Cable + Repeater only	-	W→C
	-	Cable to Wireless + Repeater only	-	C→W
DMX Memory Tx (master all addr)	-	-	Cable	MMTX C
	-	-	Wireless	MMTX W
	-	-	Cable+Wireless	MMTX CW
DMX Memory Rx (slave addr N)	Cable	Off	-	MMRX C
(Play disabled)	Wireless	Off	-	MMRX W
	-	Wireless to Cable + Repeat &Play	-	MMRX W→C
	-	Cable to Wireless + Repeat &Play	-	MMRX C→W
	-	Wireless to Cable + Repeater only	-	W→C
	-	Cable to Wireless + Repeater only	-	C→W

RDM CONTROLS IMPLEMENTED FOR GLOWUP SERIES

Control	PID	GET	SET	Description controller side
DEVICE_INFO	0x0060	X		Gathers information from the device
IDENTIFY_DEVICE	0x1000		X	Makes the red leds on the addressed device pulse
DMX_START_ADDRESS	0x00F0	X	X	Reads or sets the DMX address
SOFTWARE_VERSION_LABEL	0x00C0	X		Reads the firmware version
SUPPORTED_PARAMETERS	0x0050	X		Gathers the PIDS on the non-basic controls
PARAMETER_DESCRIPTION	0x0051	X		Gathers information on the controls related to the manufacturer
DMX_PERSONALITY	0x00E0	X	X	Reads or sets the channel mode
DMX_PERSONALITY_DESCRIPTION	0x00E1	X		Reads the description of the channel mode
MANUFACTURER_LABEL	0x0081	X		Reads the manufacturer name
DEVICE_LABEL	0x0082	X	X	Reads or writes a label on the device
SENSOR_DEFINITION	0x0200	X		Reads the description of the sensors present
SENSOR_VALUE	0x0201	X		Reads the level of the led temperature sensor
RECORD_SENSORS	0x0202		X	Saves the current temperature level
DEVICE_MODEL_DESCRIPTION	0x0080	X		Reads the text description of the model

AERIAL

8

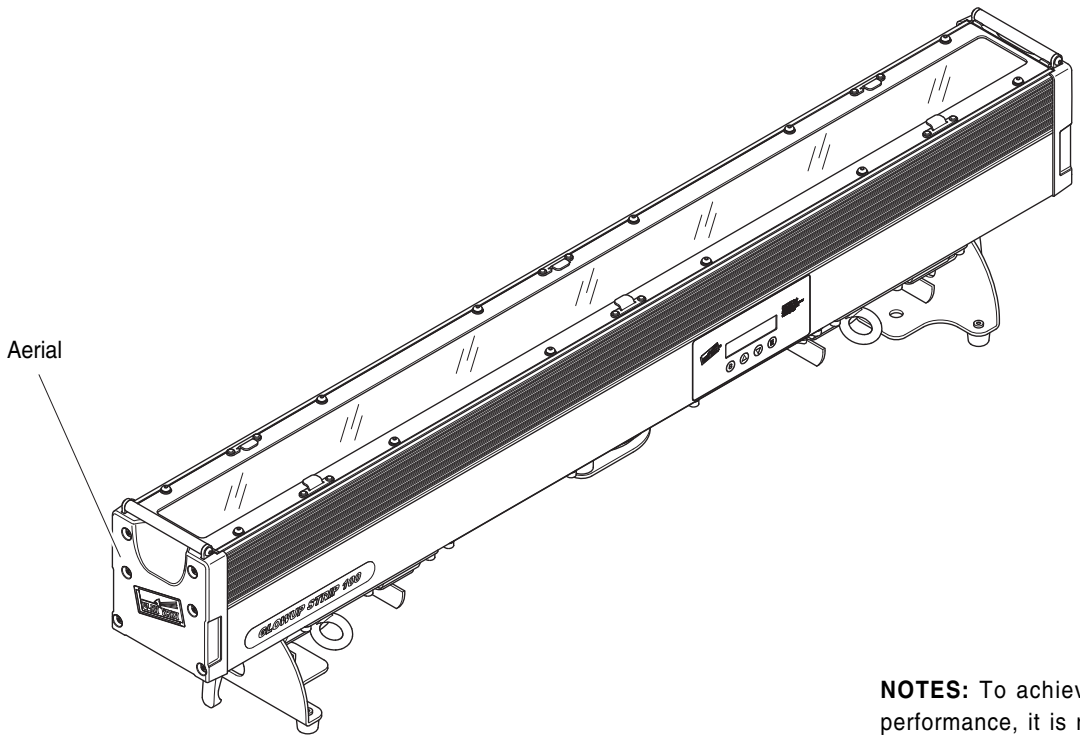

NOTES: To achieve best wireless performance, it is recommended to position GLOW UP with the aerial side facing the transmitter, when possible.

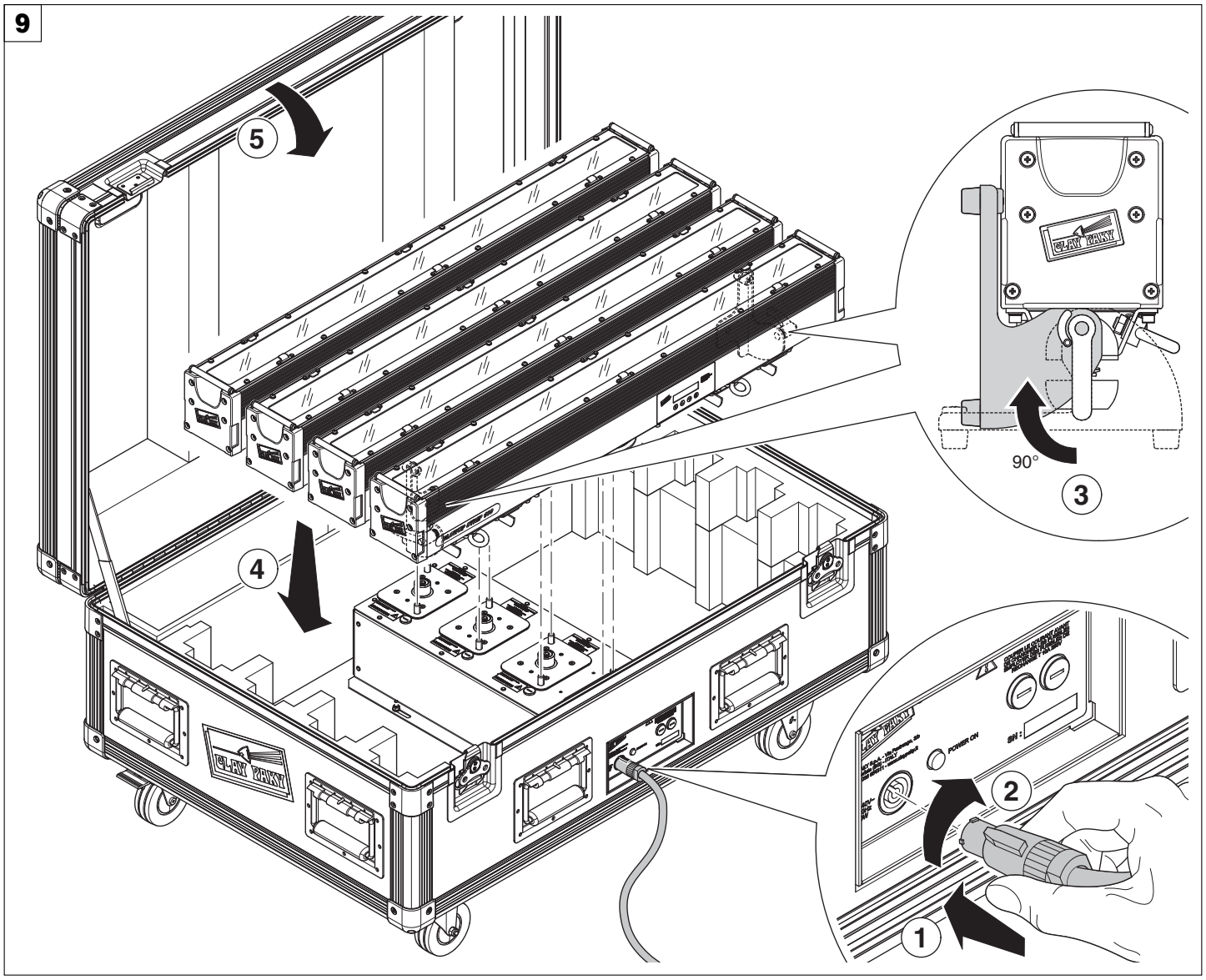

Charging GLOW UP - Fig. 9
From 1 to 4 GLOW UPs can be simultaneously charged by appropriately connecting and powering the flight-case.

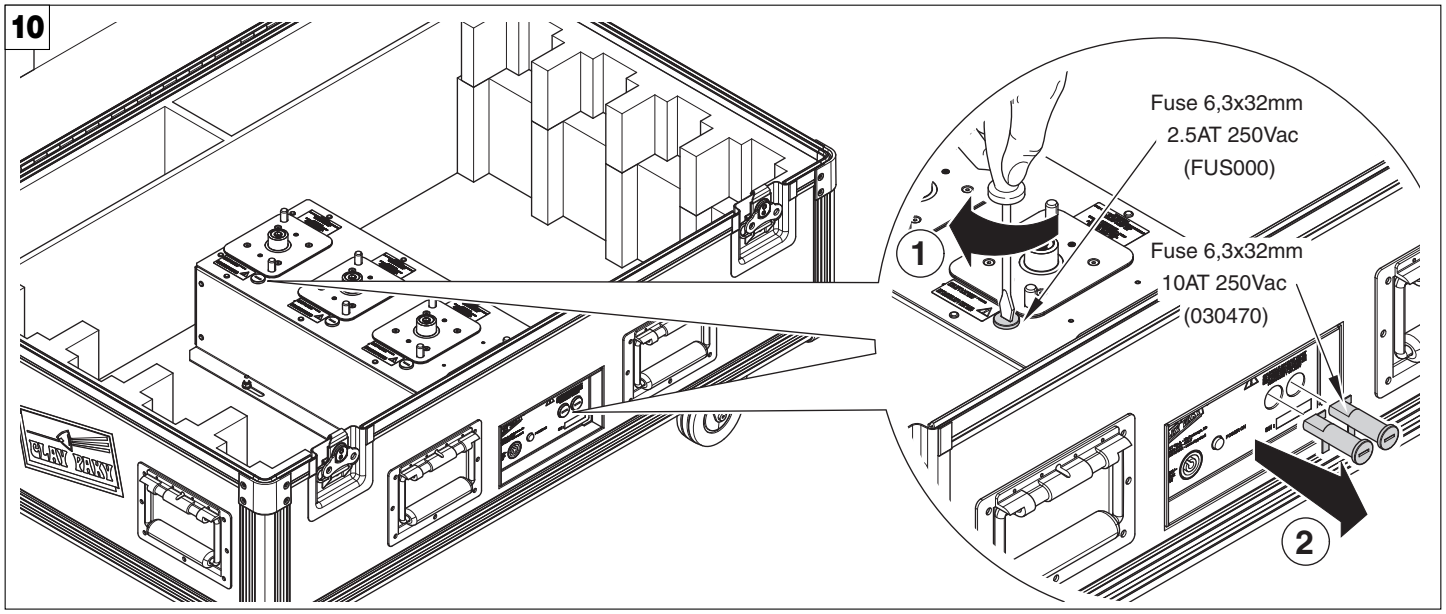

Replacing flight case fuses - Fig. 10
Each flight-case has 2 fuses associated with the main power cord connection and one fuse for each GLOW UP charge station.

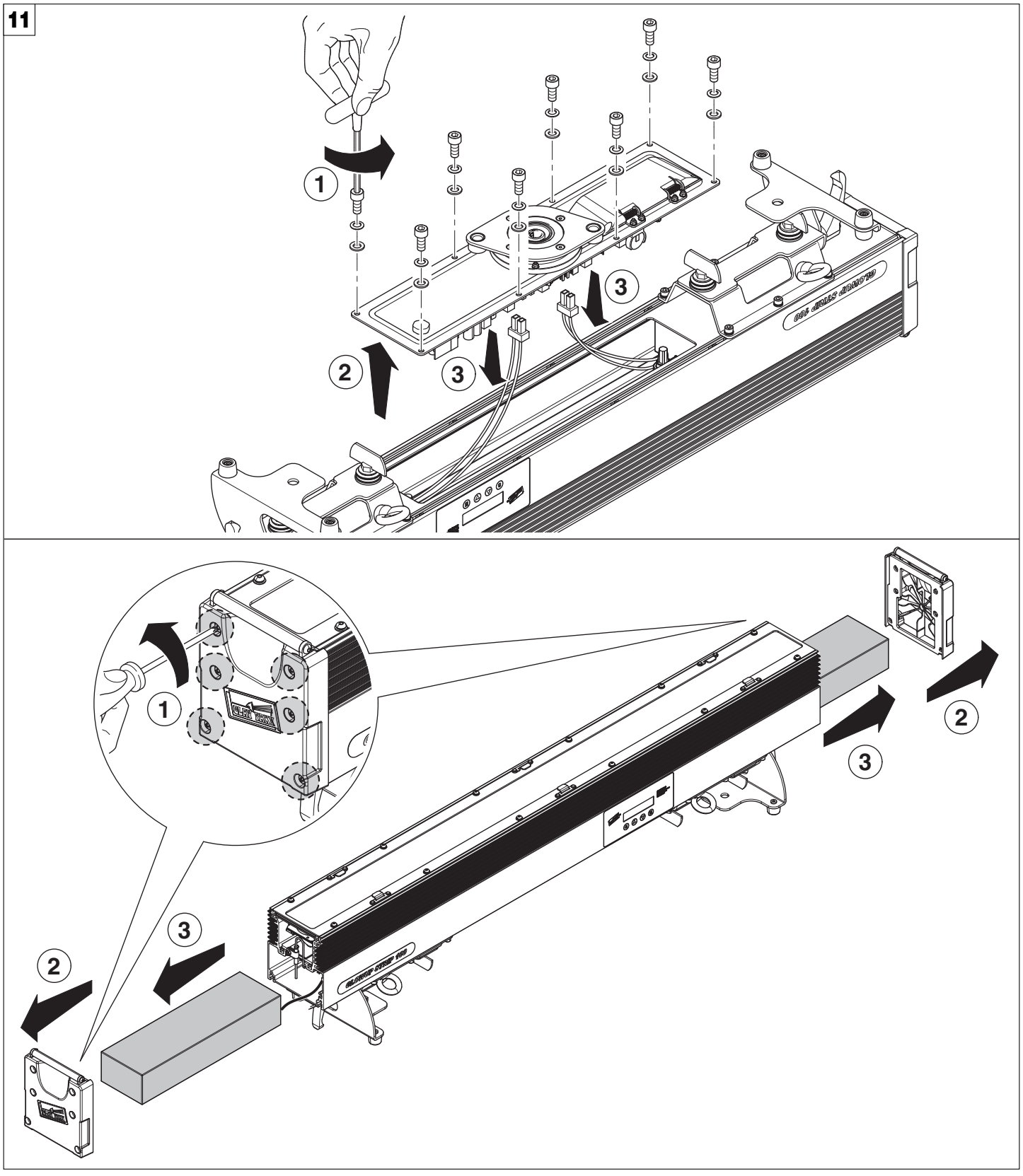

Battery removal - Fig. 11

LiFePO4

This product contains lithium iron tetraphosphate rechargeable battery. To protect the environment, please discard the battery at the end of its working life according to current law.

Notes on how to achieve correct battery operations

1) Do not tamper with the control electronic circuit, do not tamper with the battery, do not short-circuit the battery.
2) Do not reuse GLOW UP after self-switch off as this indicates a low battery; recharge GLOW UP before using it again.
3) Do not leave the battery completely flat for over 5 days.
4) When not in use, recharge the battery at least every 4 months.

12

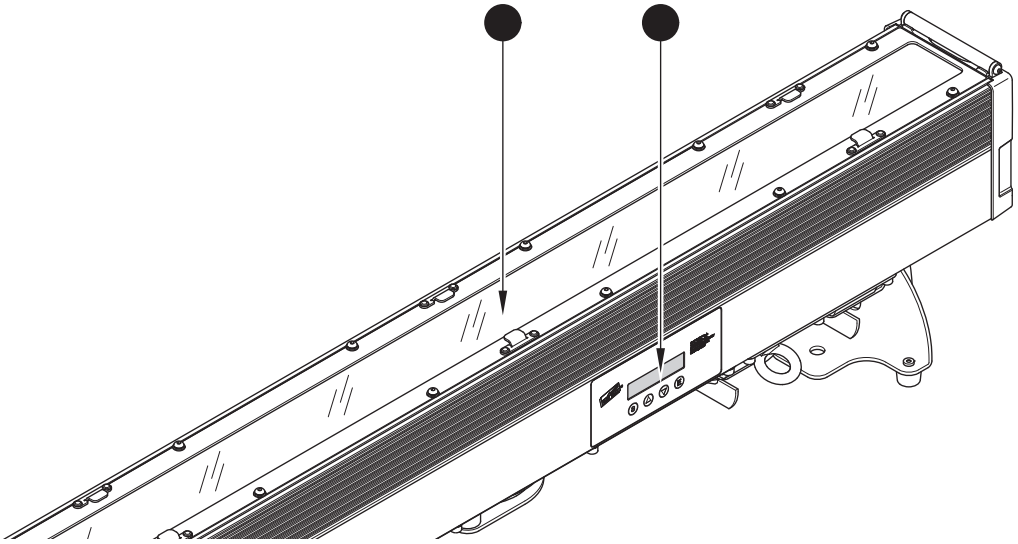

● Parts requiring frequent cleaning.

Periodic cleaning - Fig. 12

To ensure optimal operation and performance for a long time it is essential to periodically clean the parts subject to dust and grease deposits. The frequency with which the following operations are to be carried out depends on various factors such as wear and the work environment quality (air humidity, dust, salinity, etc.). To remove dirt from external parts, use a soft cloth dampened with any liquid glass cleaning detergent.

It is recommended that the projector undergoes an annual service by a qualified technician for special maintenance involving at least the following operations:

- General cleaning of internal parts.
- General visual check of internal parts, cabling, mechanical parts, etc.
- Electrical, photometric and functional checks; eventual repairs.

OPTIONAL ACCESSORIES

13

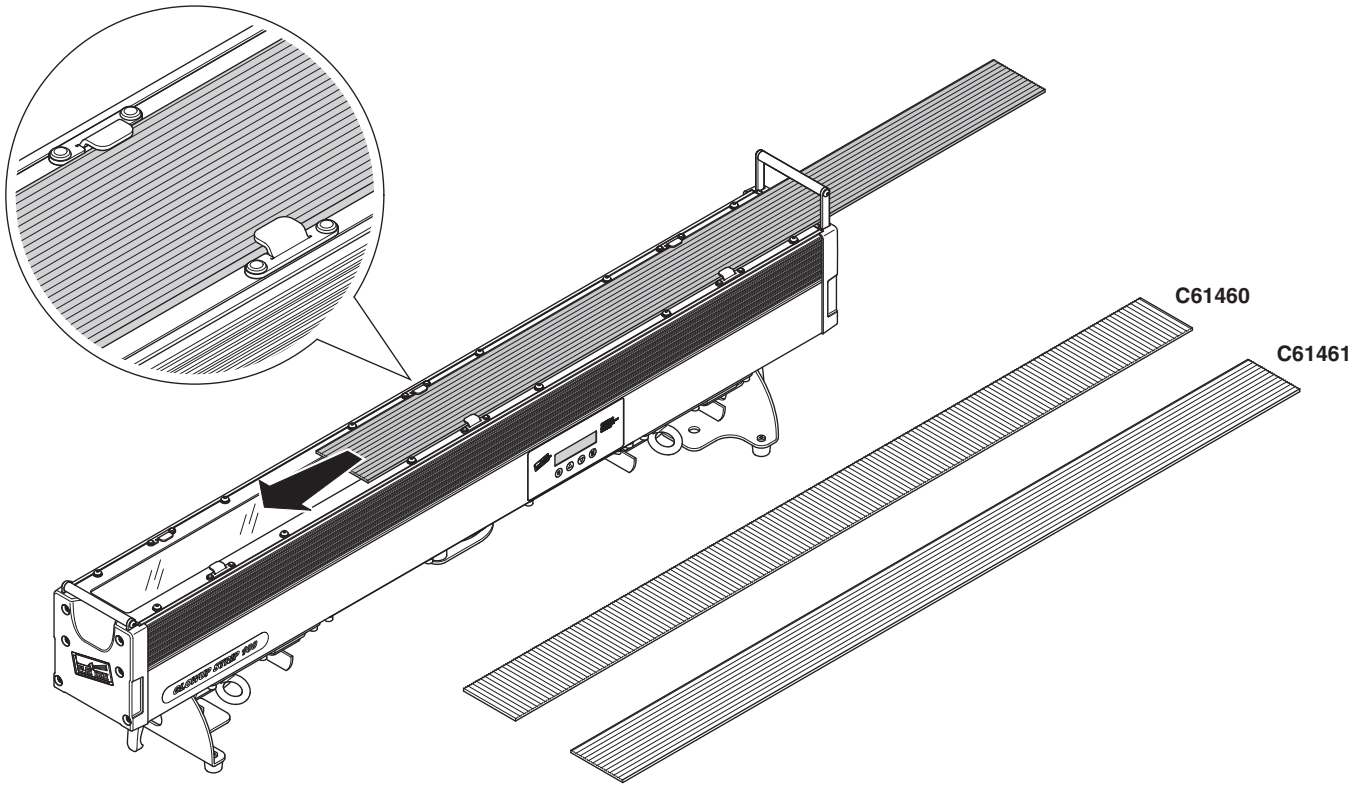

C61460 - longitudinal elliptic diffuser

C61461 - cross elliptic diffuser

TECHNICAL DATA

Source
10x LED RGBW Ostar (OSRAM)

Led pilot power
100W

Total output
Max 3400 lumens

Optics
Electronically controlled optic zoom

LED color temperature
6000K

Head adjustment
0 - 90°

Cooling
Natural Convection

Control
- Wireless DMX multimode: Master, Slave and Repeater
- Antenna built in the case IP65
- Master: can transmit other slaves the synchronised DMX scenes saved on it, both as macros and as DMX recorder.
- Repeater: Receives the signal from the master and re-transmits it to other Slaves hidden from the master
- XLR 5-pole DMX-in DMX-out standard sockets
- Default macros, user programmable macros.
- DMX recorder to save scene sequences.

User interface
- LCD display 2 lines with 16 characters each, backlit LED, white on black
- 4 membrane buttons

External power
Full range 100-240V 50-60Hz, PowerCon connector, for both battery charge and normal operations

Input Power
- 200 VA GLOW UP STRIP 100
- 650 VA Flight Case

Body
- Body extruded in black anodized aluminium
- 2 carrying handles
- 4 non-slip rubber feet

Fittings
4 fast-look holes for omega hook-up

Safety
Eyebolts for safety cables

Weight
15 Kg

Protection rating
IP65

Valves
Compensation valve IP65

Battery
- Duration 5 hours full
- Carica da Flight Case o con PowerCon
- More than 2000 charge/deplete cycles
- No memory effect
- No acid leaks

Working position
Works in any position

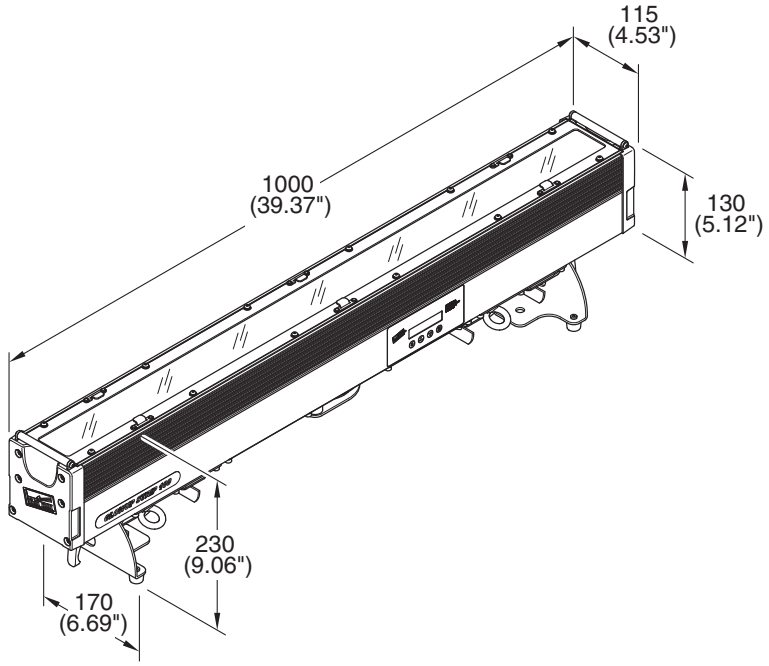

CAUSE AND SOLUTION OF PROBLEMS

THE PROJECTOR WILL NOT SWITCH ON
THE PROJECTOR WILL NOT SWITCH ON
DEFECTIVE PROJECTION
REDUCED LUMINOSITY

TROUBLE

				POSSIBLE CAUSES	***CHECKS AND REMEDIES***
●				No power supply.	Check the power supply voltage or battery charge.
●			●	LED burnt out or defective.	Call an authorised technician.
	●			Signal transmission cable faulty or disconnected.	Replace the cables.
	●			Incorrect addressing.	Check addresses (see instructions).
	●			Fault in the electronic circuits.	Call an authorised technician.
		●		Optic fault.	Call an authorised technician.
		●	●	Dust or grease deposits.	Clean (see instructions).

GLOW UP STRIP 100

CHANNEL	COMMON MODE	SINGLE MODE
1	RED	RED
2	GREEN	GREEN
3	BLUE	BLUE
4	WHITE	WHITE
5	DIMMER	RED
6	STROBE	GREEN
7	MACRO COLOR	BLUE
8	ZOOM	WHITE
9		DIMMER
10		STROBE
11		MACRO COLOR
12		ZOOM

Continued ➔

COMMON MODE

• RED - channel 1

BIT	EFFECT
255	COLOUR INSERTED
0	COLOUR EXCLUDED

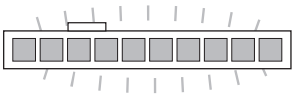

• GREEN - channel 2

BIT	EFFECT
255	COLOUR INSERTED
0	COLOUR EXCLUDED

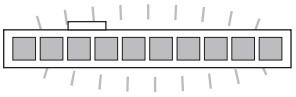

• BLUE - channel 3

BIT	EFFECT
255	COLOUR INSERTED
0	COLOUR EXCLUDED

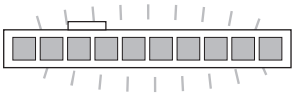

• WHITE - channel 4

BIT	EFFECT
255	COLOUR INSERTED
0	COLOUR EXCLUDED

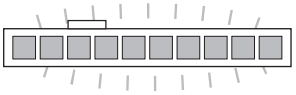

• DIMMER - channel 5

BIT	EFFECT
255	OPEN (LIGHT)
0	CLOSED (BLACK)

• STOP / STROBE - channel 6

BIT	EFFECT
251 ÷ 255	OPEN
238 ÷ 250	RANDOM STROBE FAST
225 ÷ 237	RANDOM STROBE MEDIUM
212 ÷ 224	RANDOM STROBE SLOW
207 ÷ 211	OPEN
141 ÷ 206	CLOSING PULSE FAST→SLOW
75 ÷ 140	OPENING PULSE SLOW→FAST
70 ÷ 74	OPEN
4 ÷ 69	STROBE SLOW→FAST
0 ÷ 3	OPEN

• MACRO COLOR - channel 7

BIT	EFFECT
248 - 255	COLD TONE
240 - 247	WARM TONE
232 - 239	PASTEL TONE
224 - 231	SEQ1
220 - 223	SKELTON EXOTIC SANGRIA
216 - 219	FLESH PINK
212 - 215	CHERRY ROSE
208 - 211	MAYAN SUN
204 - 207	LIGHT SALMON
200 - 203	COOL BLUE
196 - 199	URBAN BLUE
192 - 195	ROSE INDIGO
188 - 191	ALICE BLUE
184 - 187	BRIGHT BLUE
180 - 183	MAUVE
176 - 179	ENGLISH ROSE
172 - 175	FIRE
168 - 171	SURPRISE PEACH
164 - 167	SCARLET
160 - 163	SURPRISE PINK
156 - 159	JUST BLUE
152 - 155	CHOCOLATE
148 - 151	DARK LAVENDER
144 - 147	APRICOT
140 - 143	PALE LAVENDER
136 - 139	DEEP GOLDEN AMBER
132 - 135	GOLDEN AMBER
128 - 131	MEDIUM BLUE
124 - 127	BRIGHT PINK
120 - 123	DARK BLUE
116 - 119	MED BLUE GREEN
112 - 115	BLUE 2
108 - 111	MAGENTA 2
104 - 107	DARK PINK
100 - 103	LIGHT ROSE
96 - 99	ORANGE 2
92 - 95	STRAW
88 - 91	YELLOW 2
84 - 87	WHITE 2500
80 - 83	WHITE 3200
76 - 79	WARM WHITE
72 - 75	COOL WHITE
68 - 71	FULL WHITE
64 - 67	SKY BLUE
60 - 63	AQUAMARINE
56 - 59	VIOLET
52 - 55	PINK
48 - 51	ORANGE
44 - 47	WHITE
40 - 43	MAGENTA
36 - 39	CYAN
32 - 35	YELLOW
28 - 31	BLUE
24 - 27	GREEN
20 - 23	RED
0 - 19	NONE

• ZOOM - channel 8

BIT	EFFECT
255	WIDE BEAM
0	NARROW BEAM

Continued ➔

SINGLE MODE

• RED - channel 1

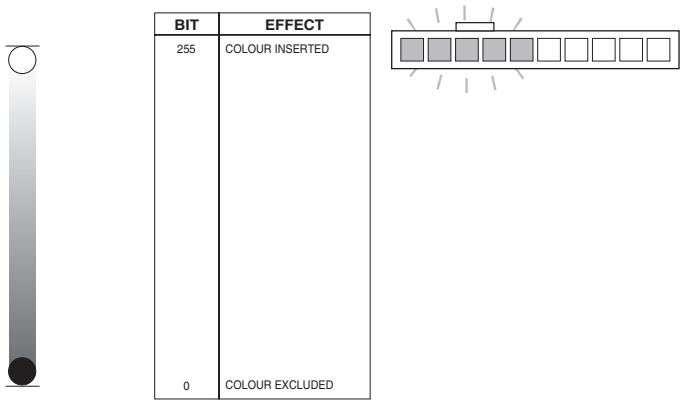

• GREEN - channel 2

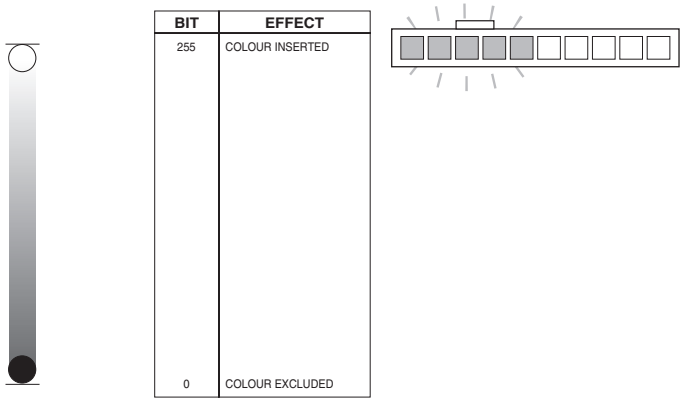

• BLUE - channel 3

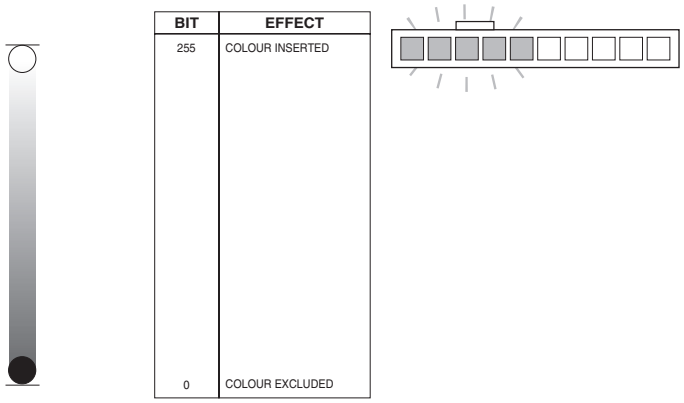

• WHITE - channel 4

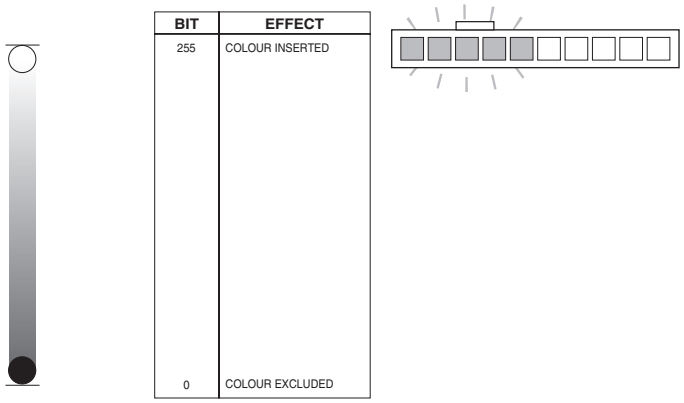

• RED - channel 5

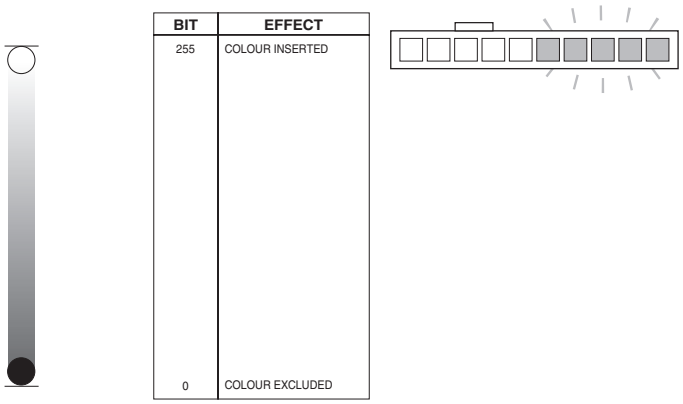

• GREEN - channel 6

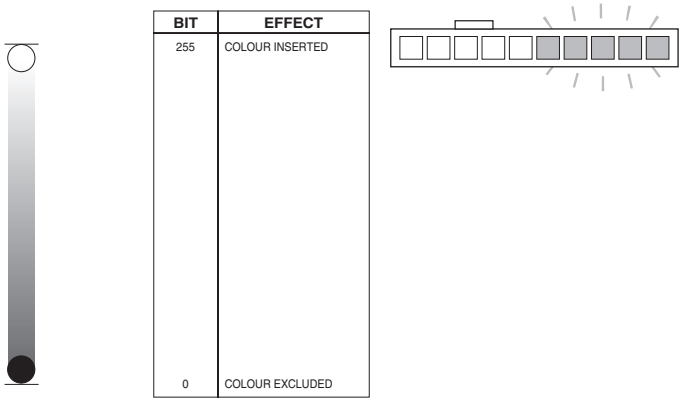

• BLUE - channel 7

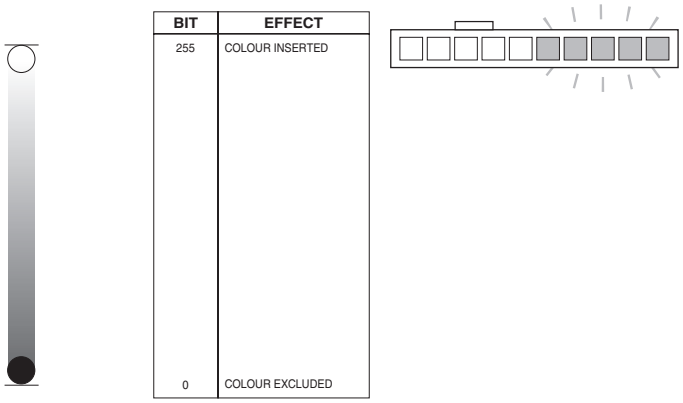

• WHITE - channel 8

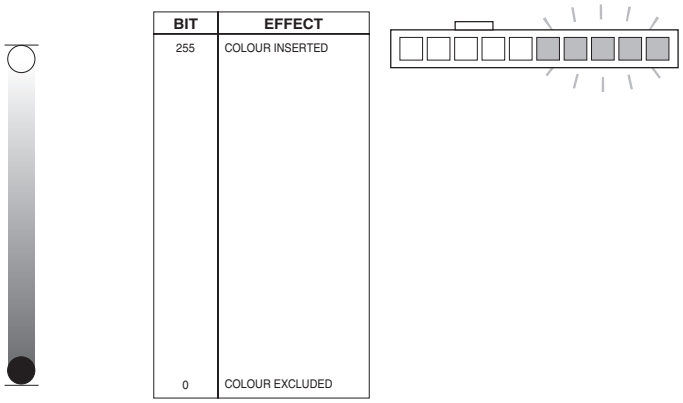

• DIMMER - channel 9

BIT	EFFECT
255	OPEN (LIGHT)
0	CLOSED (BLACK)

• STOP / STROBE - channel 10

BIT	EFFECT
251 ÷ 255	OPEN
238 ÷ 250	RANDOM STROBE FAST
225 ÷ 237	RANDOM STROBE MEDIUM
212 ÷ 224	RANDOM STROBE SLOW
207 ÷ 211	OPEN
141 ÷ 206	CLOSING PULSE FAST→SLOW
75 ÷ 140	OPENING PULSE SLOW→FAST
70 ÷ 74	OPEN
4 ÷ 69	STROBE SLOW→FAST
0 ÷ 3	OPEN

• MACRO COLOR - channel 11

BIT	EFFECT
248 - 255	COLD TONE
240 - 247	WARM TONE
232 - 239	PASTEL TONE
224 - 231	SEQ1
220 - 223	SKELTON EXOTIC SANGRIA
216 - 219	FLESH PINK
212 - 215	CHERRY ROSE
208 - 211	MAYAN SUN
204 - 207	LIGHT SALMON
200 - 203	COOL BLUE
196 - 199	URBAN BLUE
192 - 195	ROSE INDIGO
188 - 191	ALICE BLUE
184 - 187	BRIGHT BLUE
180 - 183	MAUVE
176 - 179	ENGLISH ROSE
172 - 175	FIRE
168 - 171	SURPRISE PEACH
164 - 167	SCARLET
160 - 163	SURPRISE PINK
156 - 159	JUST BLUE
152 - 155	CHOCOLATE
148 - 151	DARK LAVENDER
144 - 147	APRICOT
140 - 143	PALE LAVENDER
136 - 139	DEEP GOLDEN AMBER
132 - 135	GOLDEN AMBER
128 - 131	MEDIUM BLUE
124 - 127	BRIGHT PINK
120 - 123	DARK BLUE
116 - 119	MED BLUE GREEN
112 - 115	BLUE 2
108 - 111	MAGENTA 2
104 - 107	DARK PINK
100 - 103	LIGHT ROSE
96 - 99	ORANGE 2
92 - 95	STRAW
88 - 91	YELLOW 2
84 - 87	WHITE 2500
80 - 83	WHITE 3200
76 - 79	WARM WHITE
72 - 75	COOL WHITE
68 - 71	FULL WHITE
64 - 67	SKY BLUE
60 - 63	AQUAMARINE
56 - 59	VIOLET
52 - 55	PINK
48 - 51	ORANGE
44 - 47	WHITE
40 - 43	MAGENTA
36 - 39	CYAN
32 - 35	YELLOW
28 - 31	BLUE
24 - 27	GREEN
20 - 23	RED
0 - 19	NONE

• ZOOM - channel 12

BIT	EFFECT
255	WIDE BEAM
0	NARROW BEAM

IST003/001 – EN - Rev.B 09/2015 gf|studio

CLAY PAKY S.p.A. - Via Pastrengo, 3/b - 24068 Seriate (BG) Italy - Tel. +39-035-654311 - Fax +39-035-301876 - **www.claypaky.it**